MONTAGEANLEITUNG

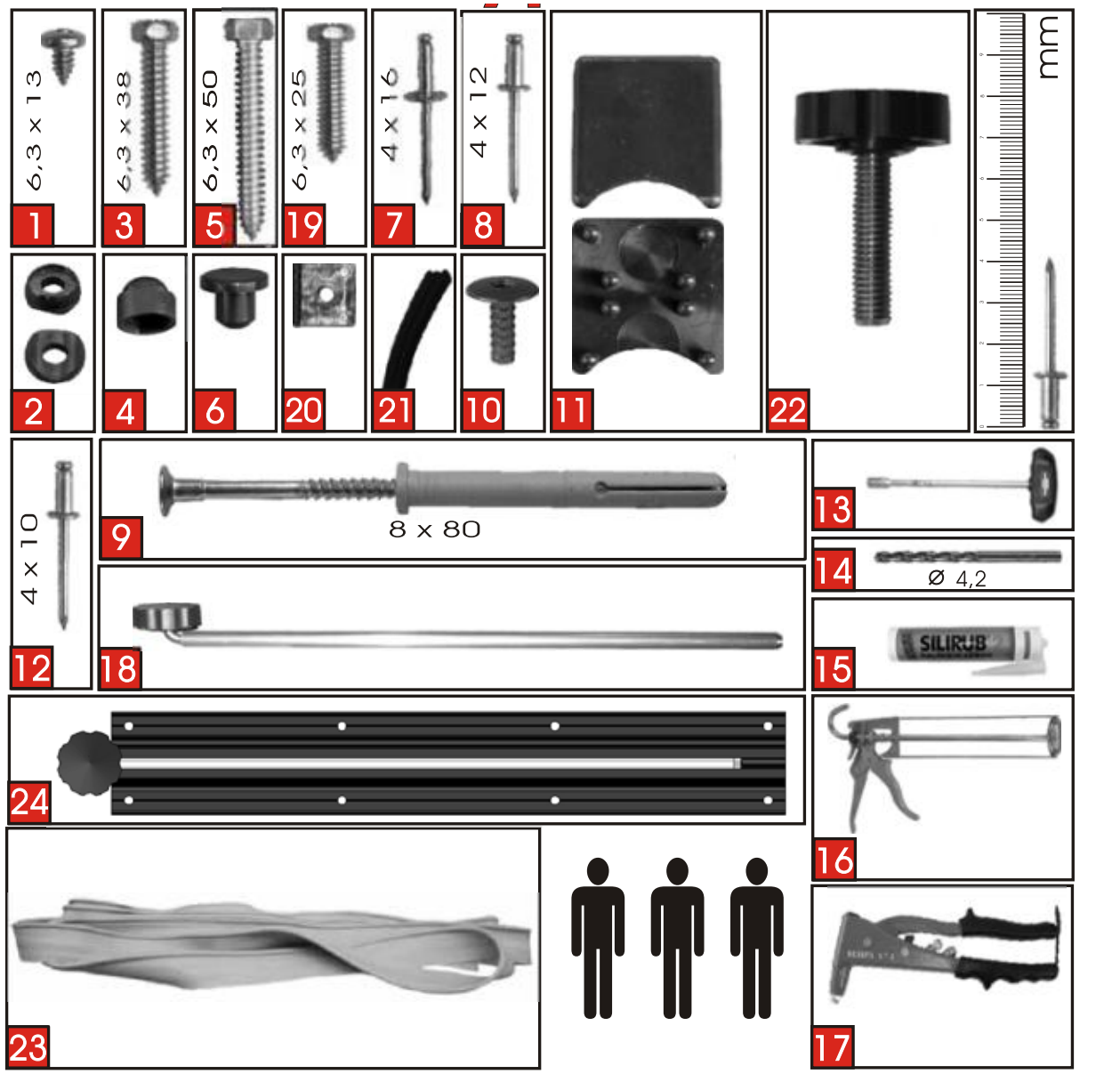
6,3 x 13
1
6,3 x 38
3
6,3 x 50
5
6,3 x 25
19
4 x 16
7
4 x 12
8
mm
2
4
6
20
21
10
11
22
4 x 10
12
9
8 x 80
13
14
Ø 4,2
18
SILIRUB
15
24
16
23
17

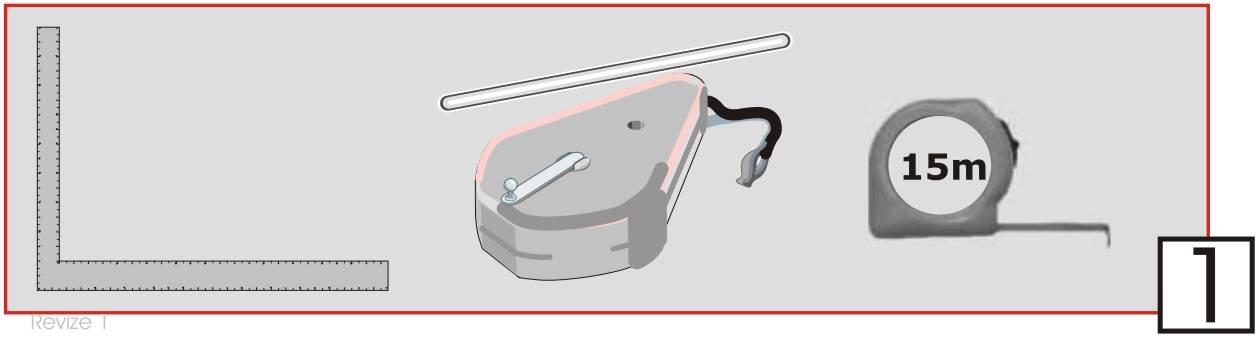
15m
1

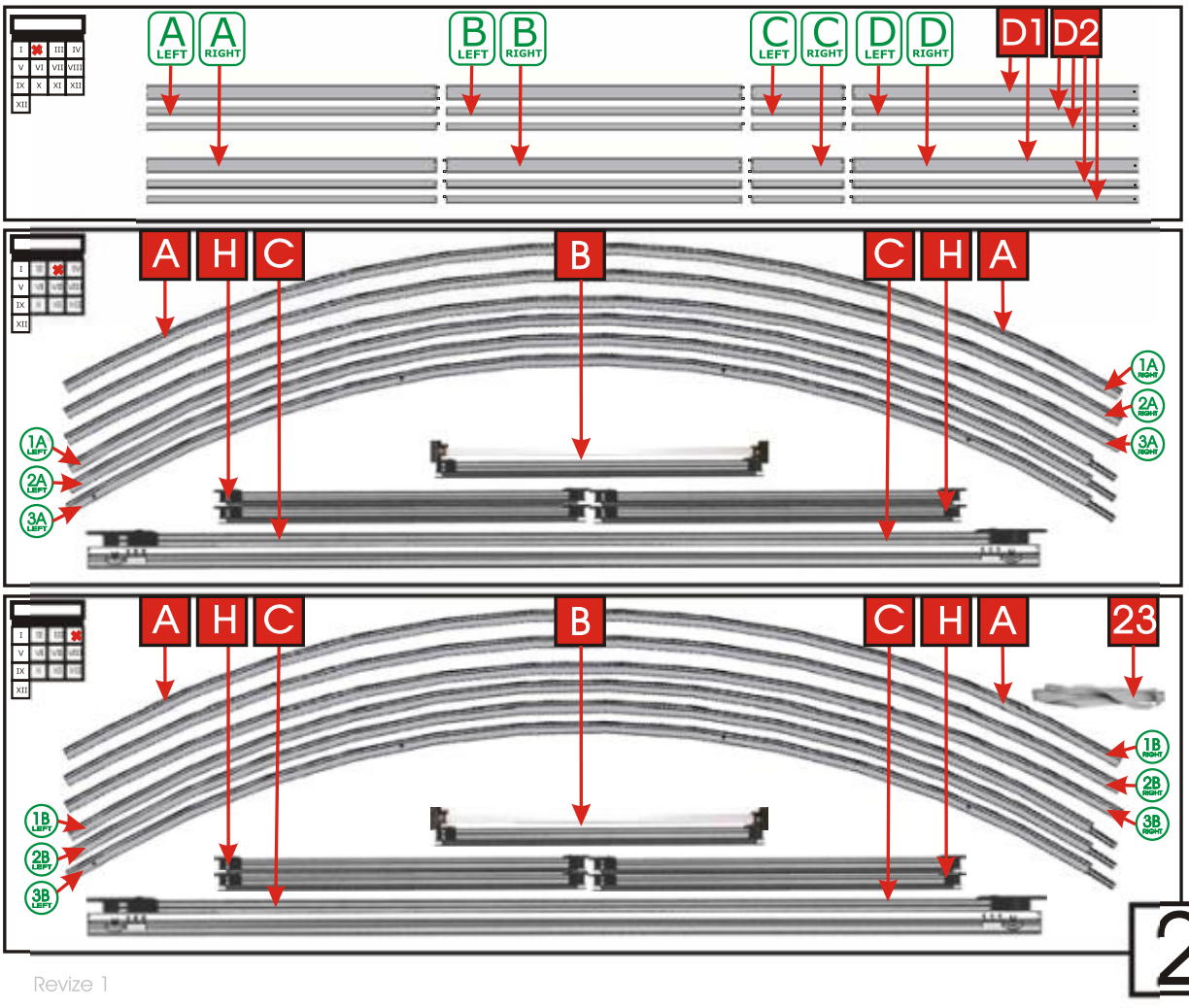
A LEFT
A RIGHT
B LEFT
B RIGHT
C LEFT
C RIGHT
D LEFT
D RIGHT
D1
D2
A
H
C
B
C
H
A
1A LEFT
2A LEFT
3A LEFT
1A RIGHT
2A RIGHT
3A RIGHT
A
H
C
B
C
H
A
23
1B LEFT
2B LEFT
3B LEFT
1B RIGHT
2B RIGHT
3B RIGHT

2

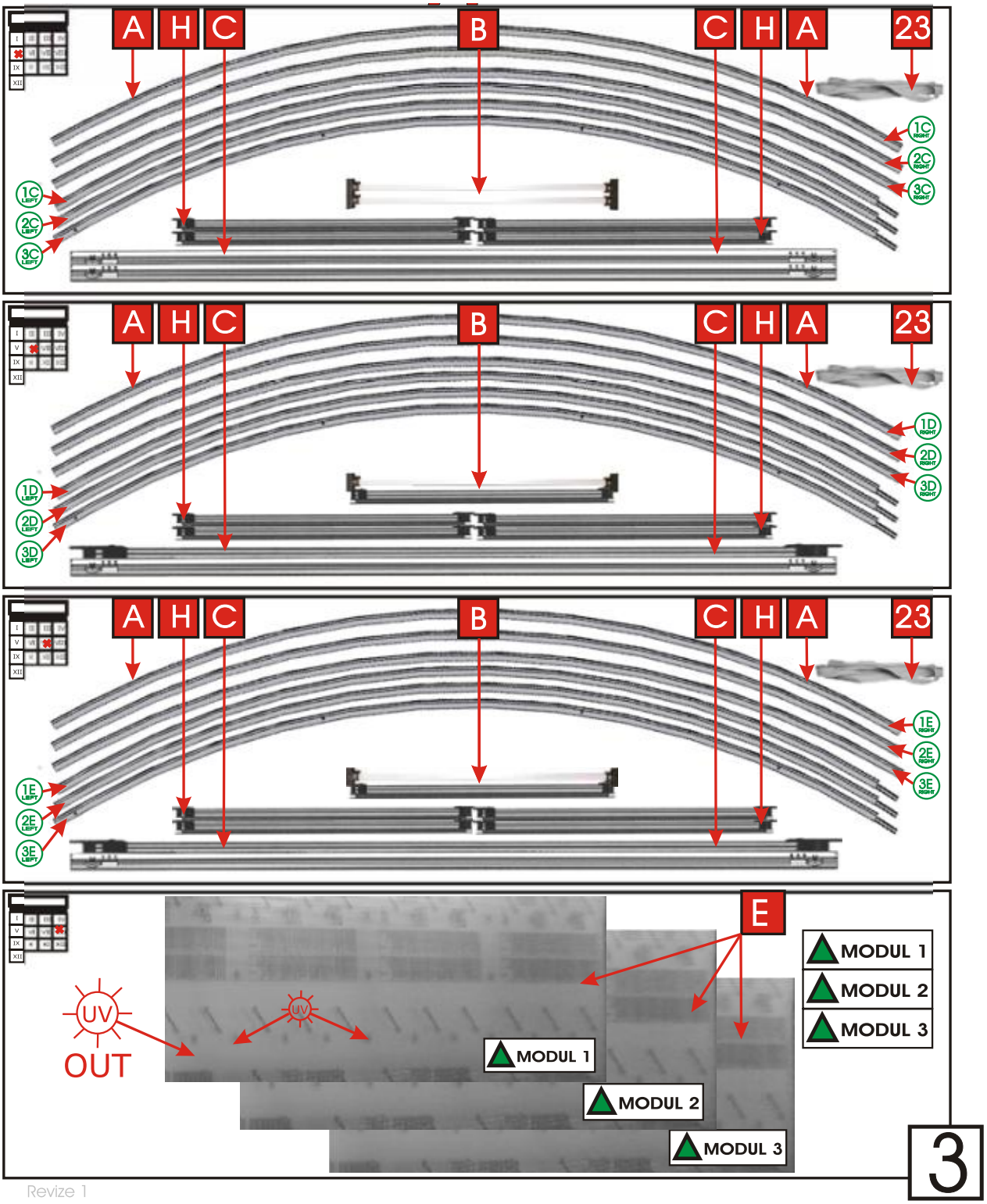
A
H
C
B
C
H
A
23
1C LEFT
2C LEFT
3C LEFT
1C RIGHT
2C RIGHT
3C RIGHT
1D LEFT
2D LEFT
3D LEFT
1D RIGHT
2D RIGHT
3D RIGHT
1E LEFT
2E LEFT
3E LEFT
1E RIGHT
2E RIGHT
3E RIGHT
E
UV
OUT
MODUL 1
MODUL 2
MODUL 3
3

Revize 1

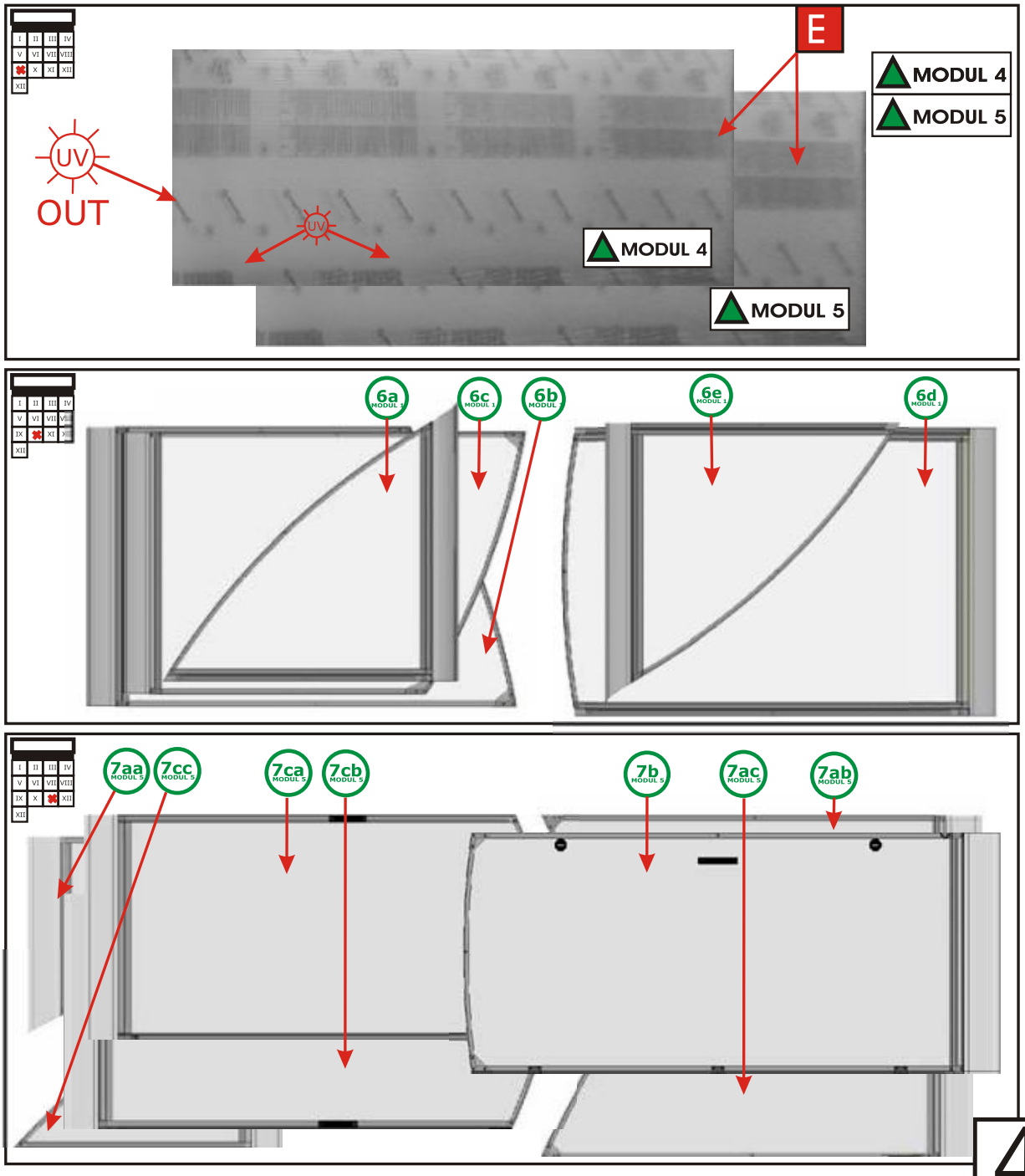
E
MODUL 4
MODUL 5
UV
OUT
UV
MODUL 4
MODUL 5
6a
6c
6b
6e
6d
7aa
7cc
7ca
7cb
7b
7ac
7ab
4

Revize 1

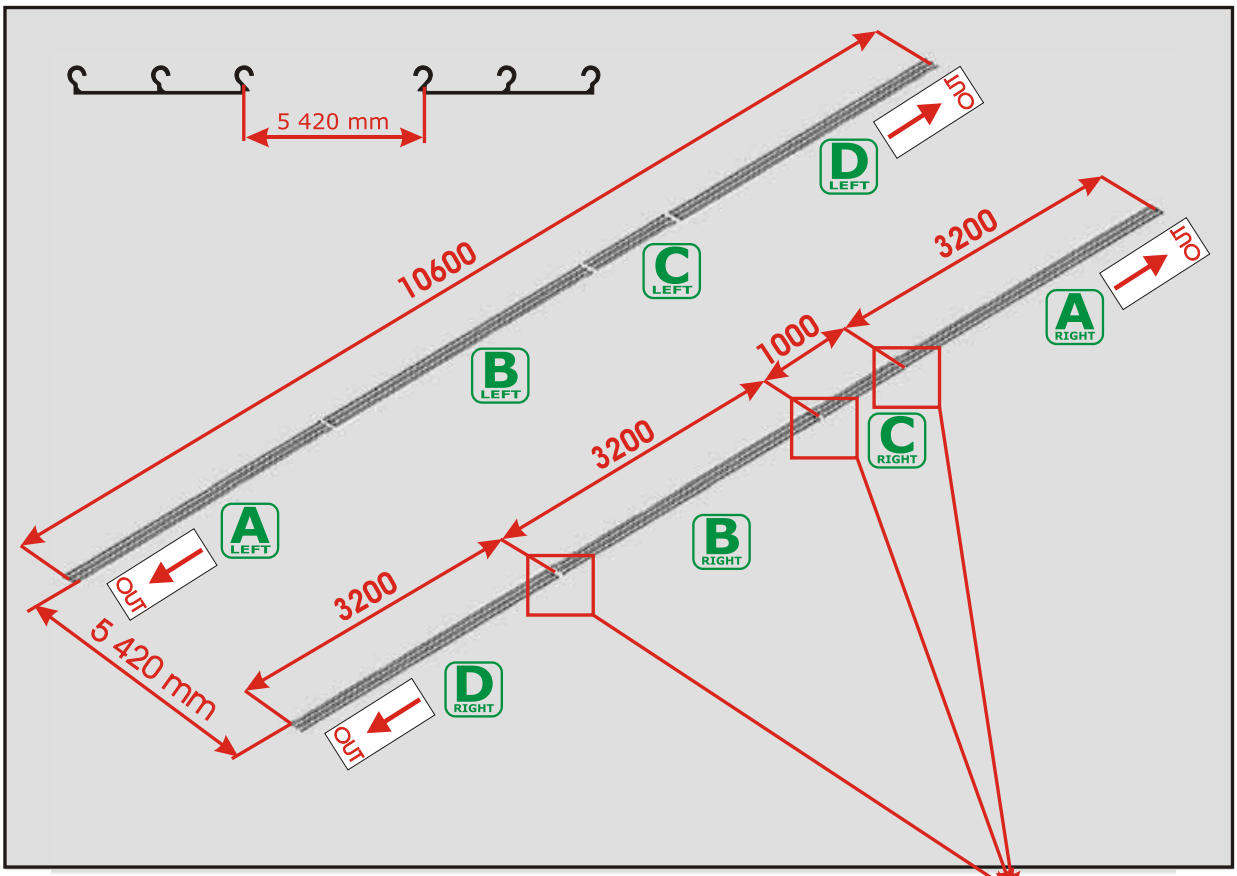
5 420 mm
10600
3200
1000
3200
3200
5 420 mm
OUT
OUT
OUT
OUT
A LEFT
B LEFT
C LEFT
D LEFT
A RIGHT
B RIGHT
C RIGHT
D RIGHT

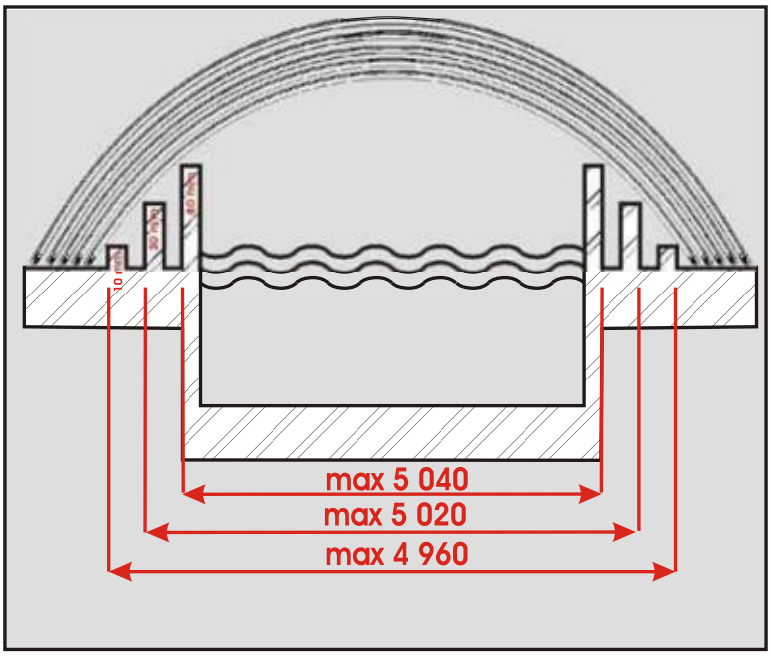
max 5 040
max 5 020
max 4 960

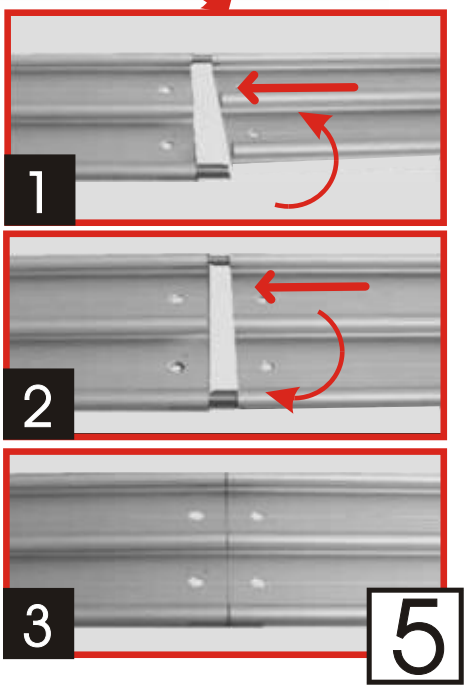
1
2
3

5

Revize 1

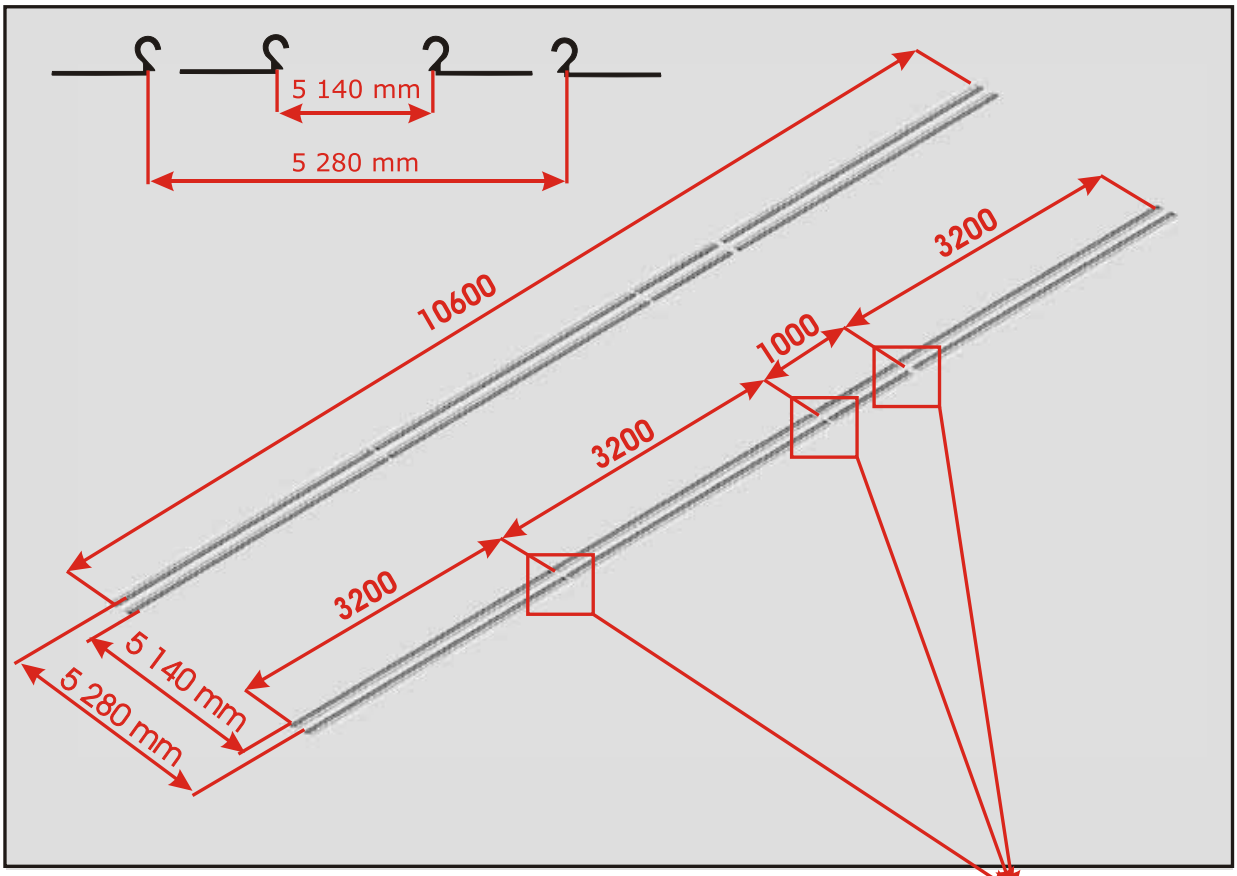

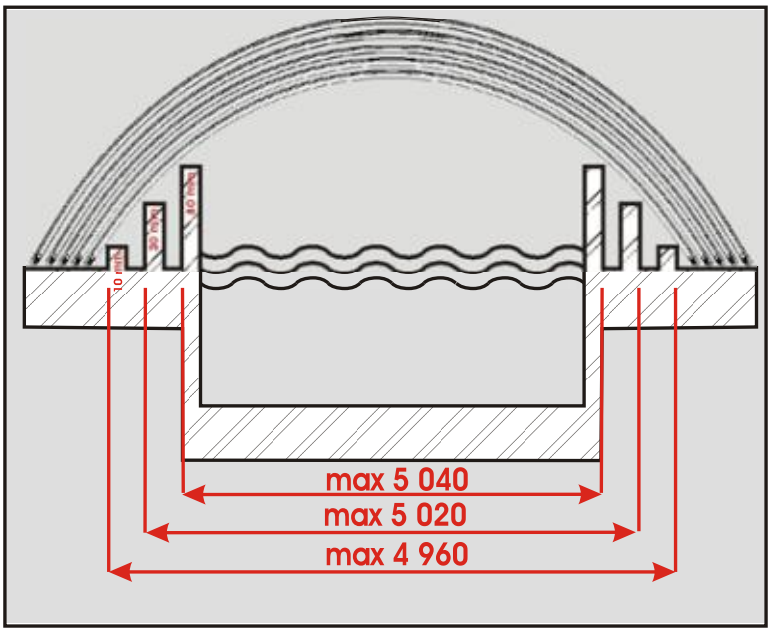

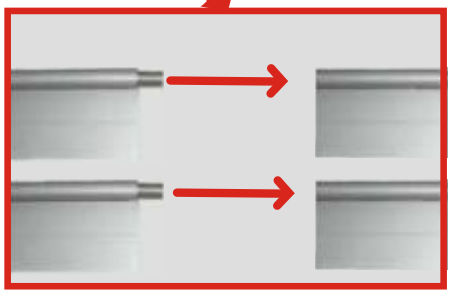

TZÚS PRAHA • Státní autorizovaná zkušebna č. 204
TZÚS
CERTIFIKOVÁNO
CZ

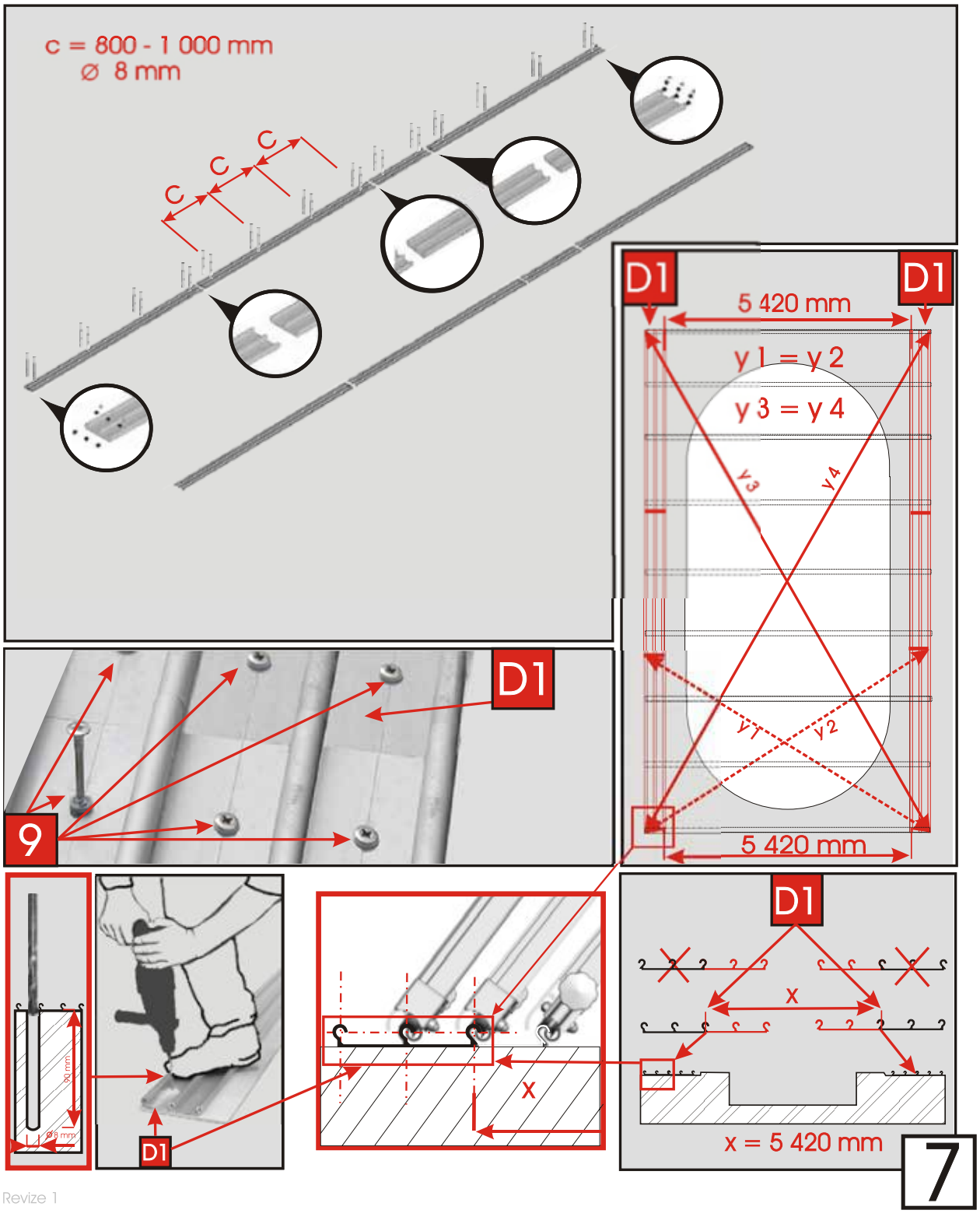
c = 800 - 1 000 mm
Ø 8 mm
c
c
c
D1
D1
5 420 mm
y 1 = y 2
y 3 = y 4
y3
y4
y1
y2
5 420 mm
D1
9
D1
90 mm
Ø 8 mm
D1
x
D1
x
x = 5 420 mm
7

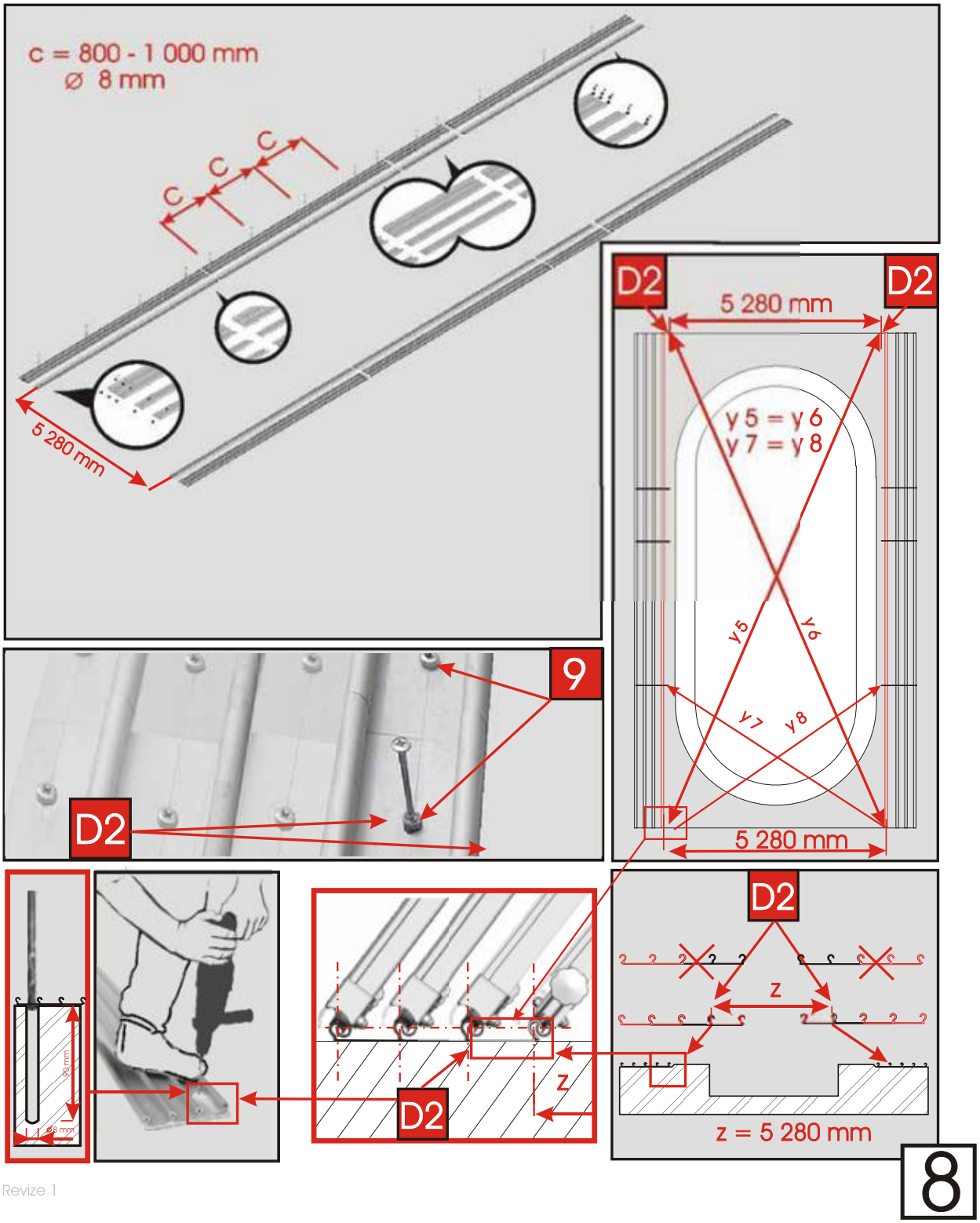
c = 800 - 1 000 mm
Ø 8 mm
C
C
C
5 280 mm
D2
D2
5 280 mm
y 5 = y 6
y 7 = y 8
y 5
y 6
y 7
y 8
5 280 mm
9
D2
D2
z
z
D2
z = 5 280 mm
8

Revize 1

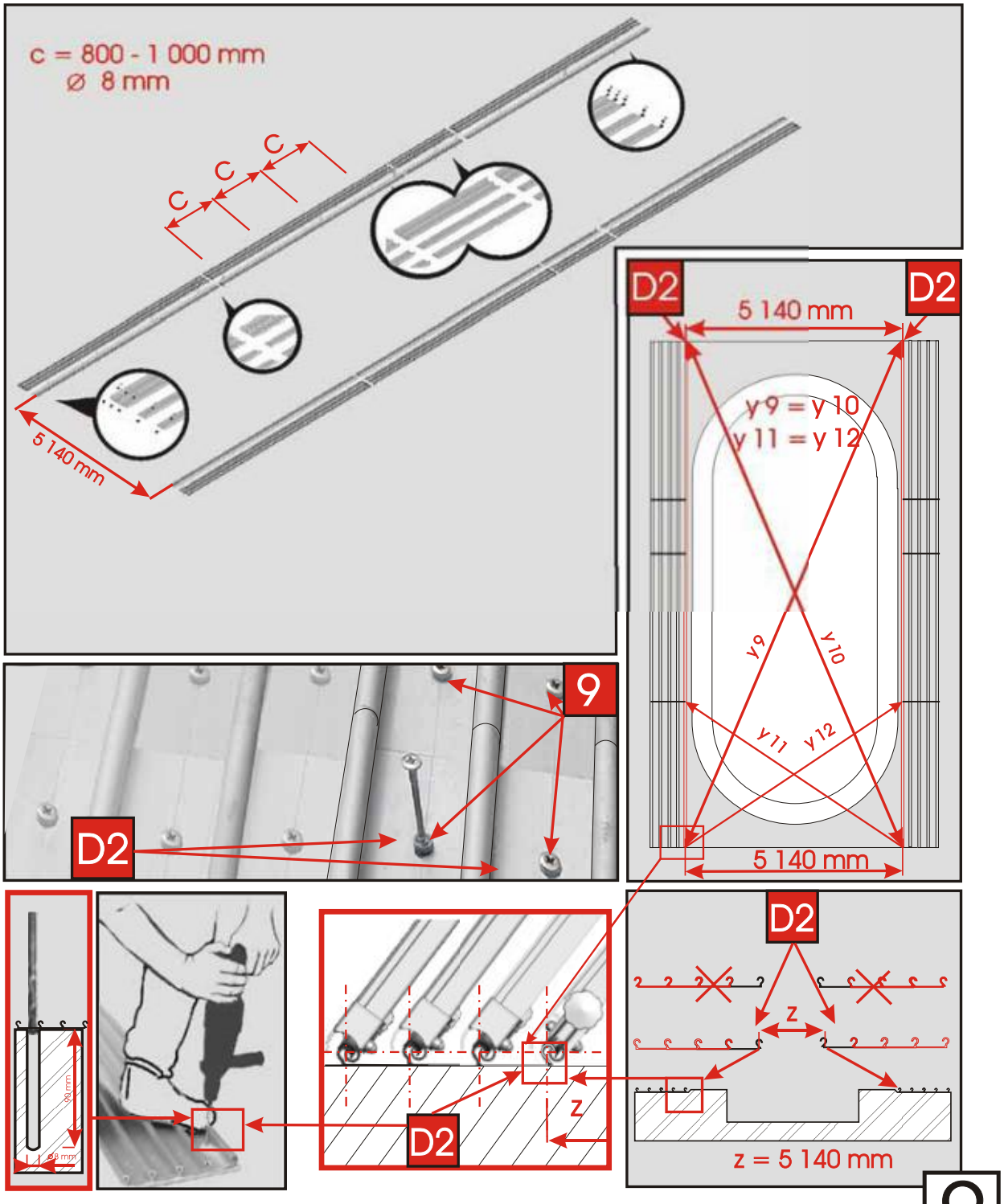
c = 800 - 1 000 mm
Ø 8 mm
c
c
c
5 140 mm
D2
D2
5 140 mm
y 9 = y 10
y 11 = y 12
y9
y10
y11
y12
5 140 mm
9
D2
D2
z
z
D2
z = 5 140 mm
9

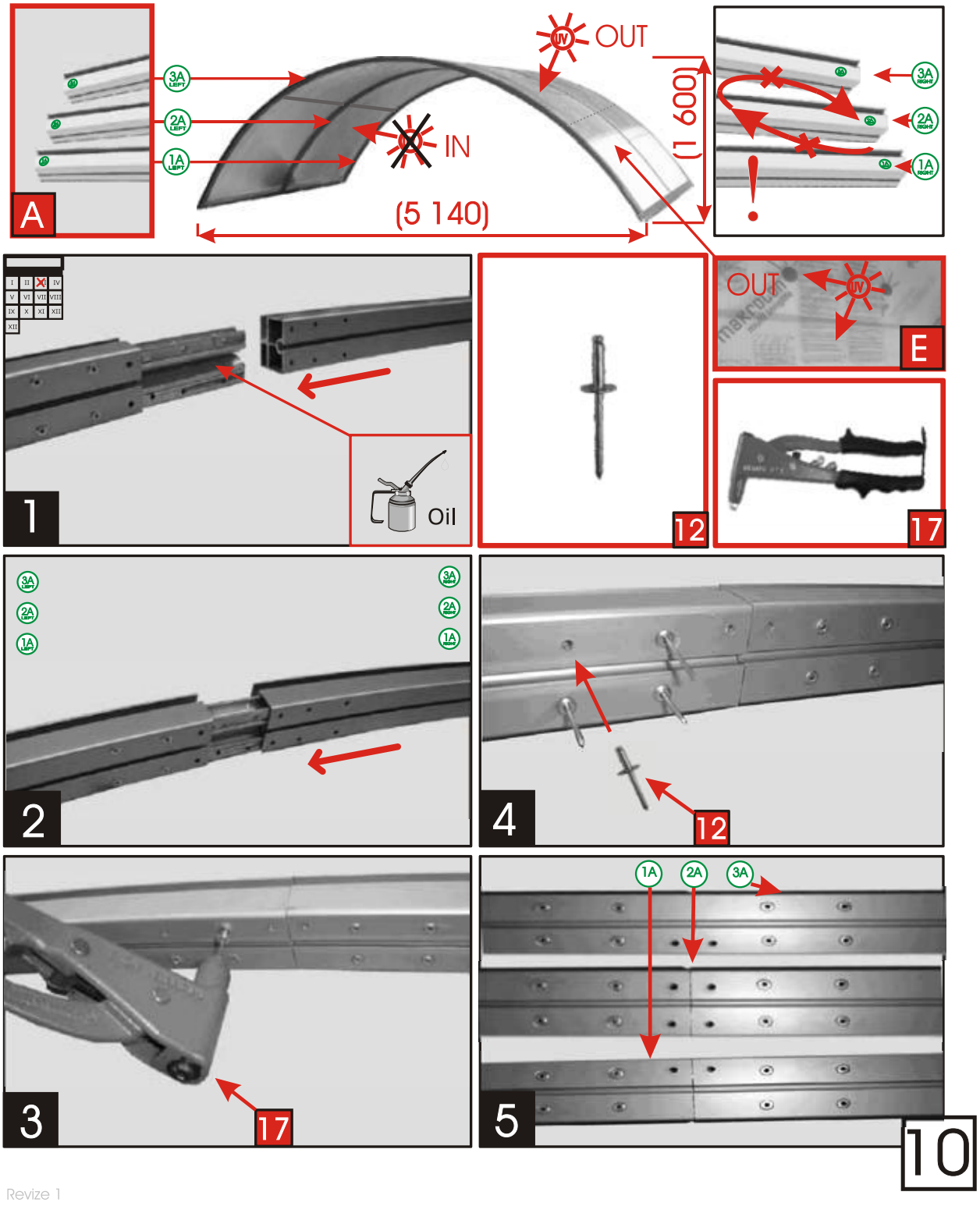
A
3A LEFT
2A LEFT
1A LEFT
OUT
IV
IN
(5 140)
(1 600)
3A RIGHT
2A RIGHT
1A RIGHT
!
1
Oil
12
OUT
IV
E
17
2
4
12
3
17
5
1A
2A
3A
10

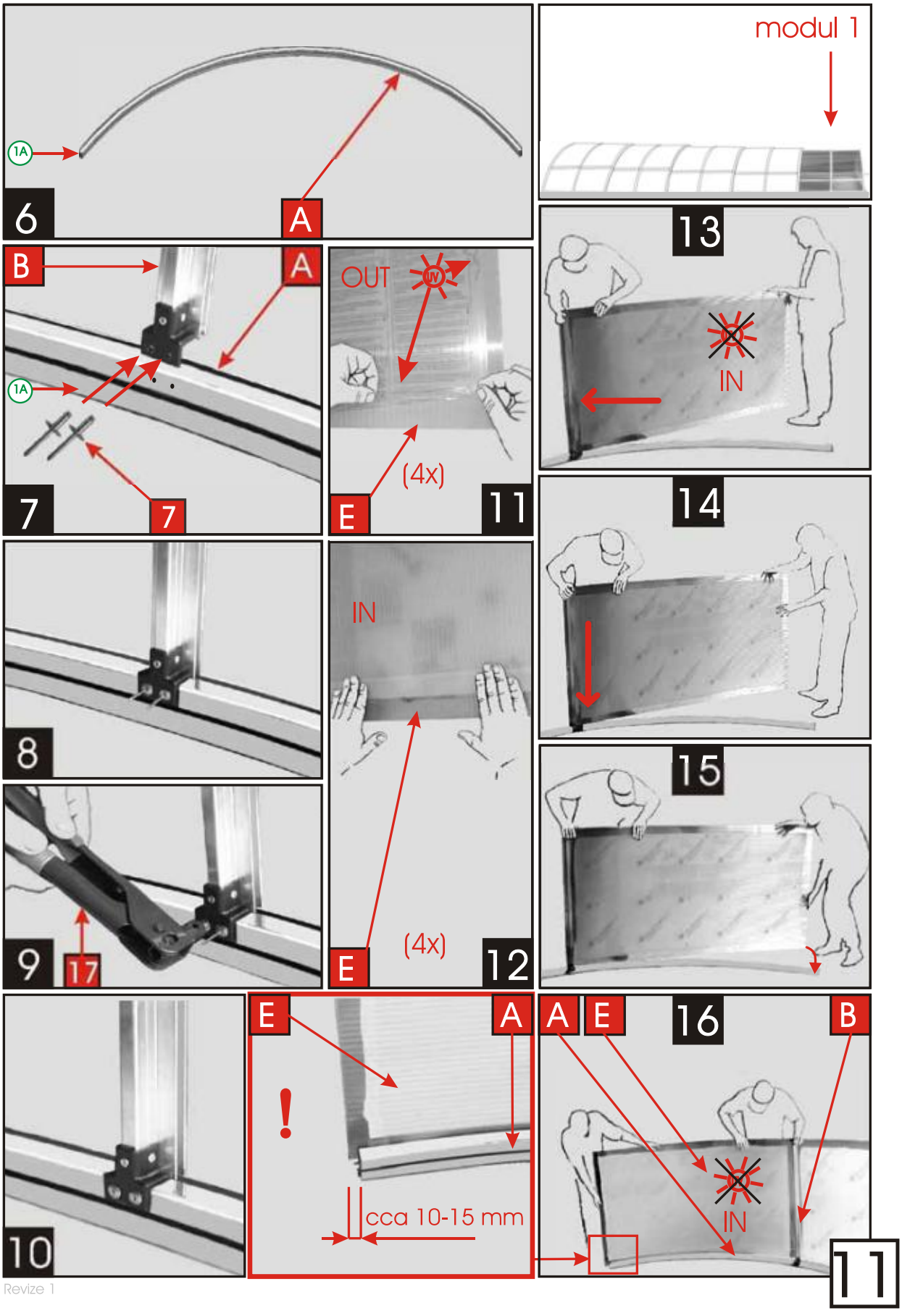
6
1A
A
modul 1
B
A
1A
7
7
OUT
UV
(4x)
E
11
13
IN
14
8
IN
9
17
(4x)
E
12
15
10
E
A
!
cca 10-15 mm
A
E
16
B
IN
11

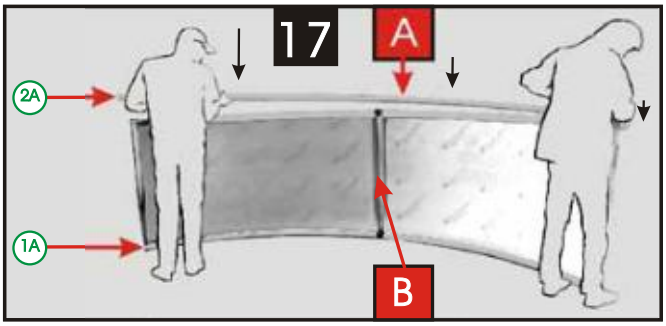
17
A
2A
1A
B

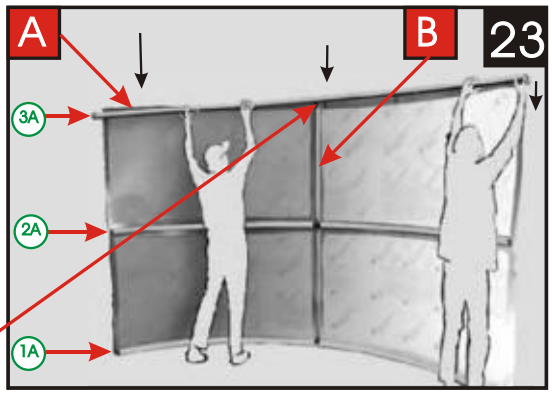
A
B
23
3A
2A
1A

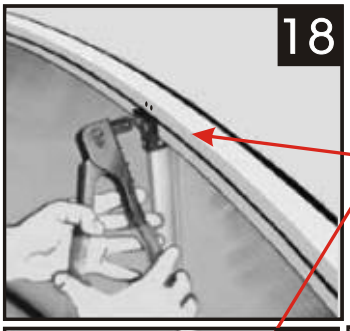
18

7

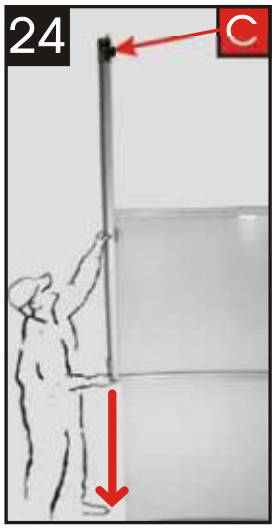
24
C

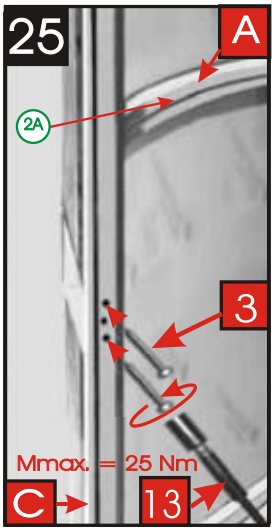
25
A
2A
3
Mmax. = 25 Nm
C
13

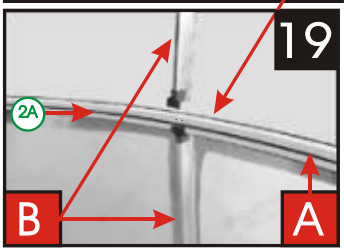
19
2A
B
A

20

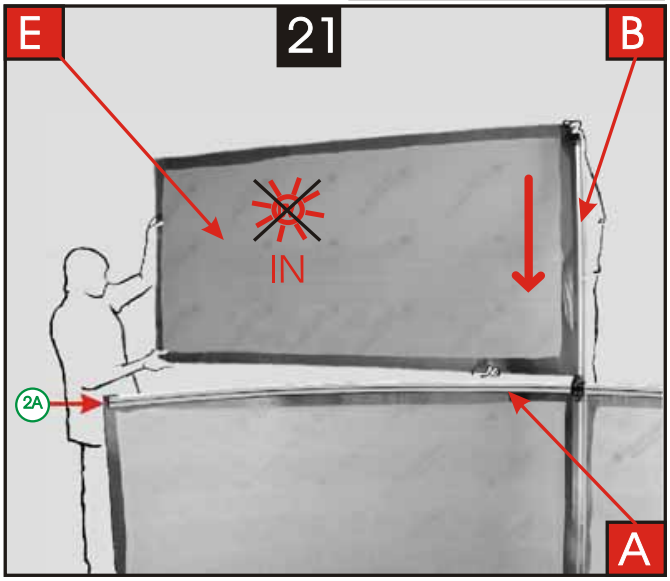
E
21
B
IN
2A
A

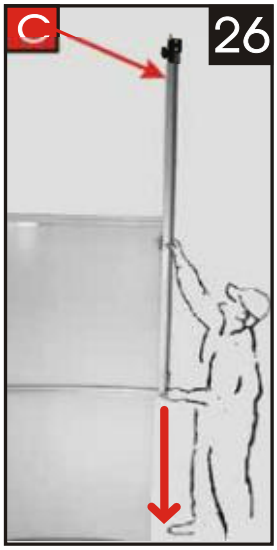
C
26

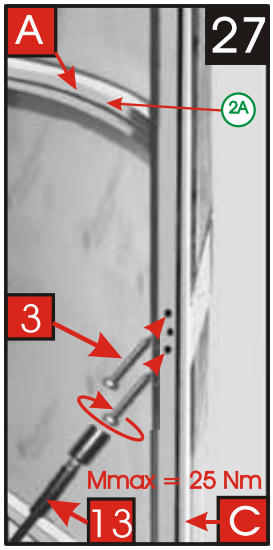
A
27
2A
3
Mmax = 25 Nm
13
C

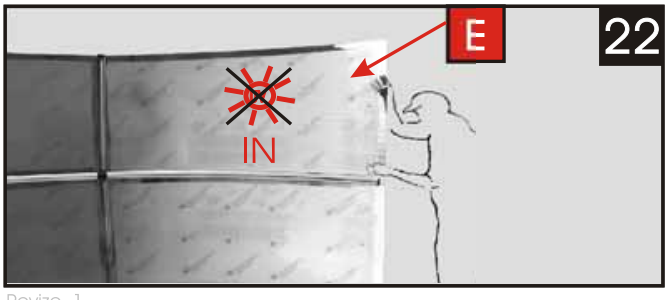
E
22
IN

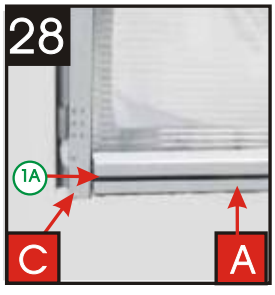
28
1A
C
A

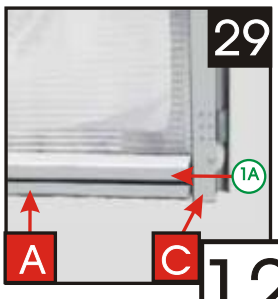
29
1A
A
C

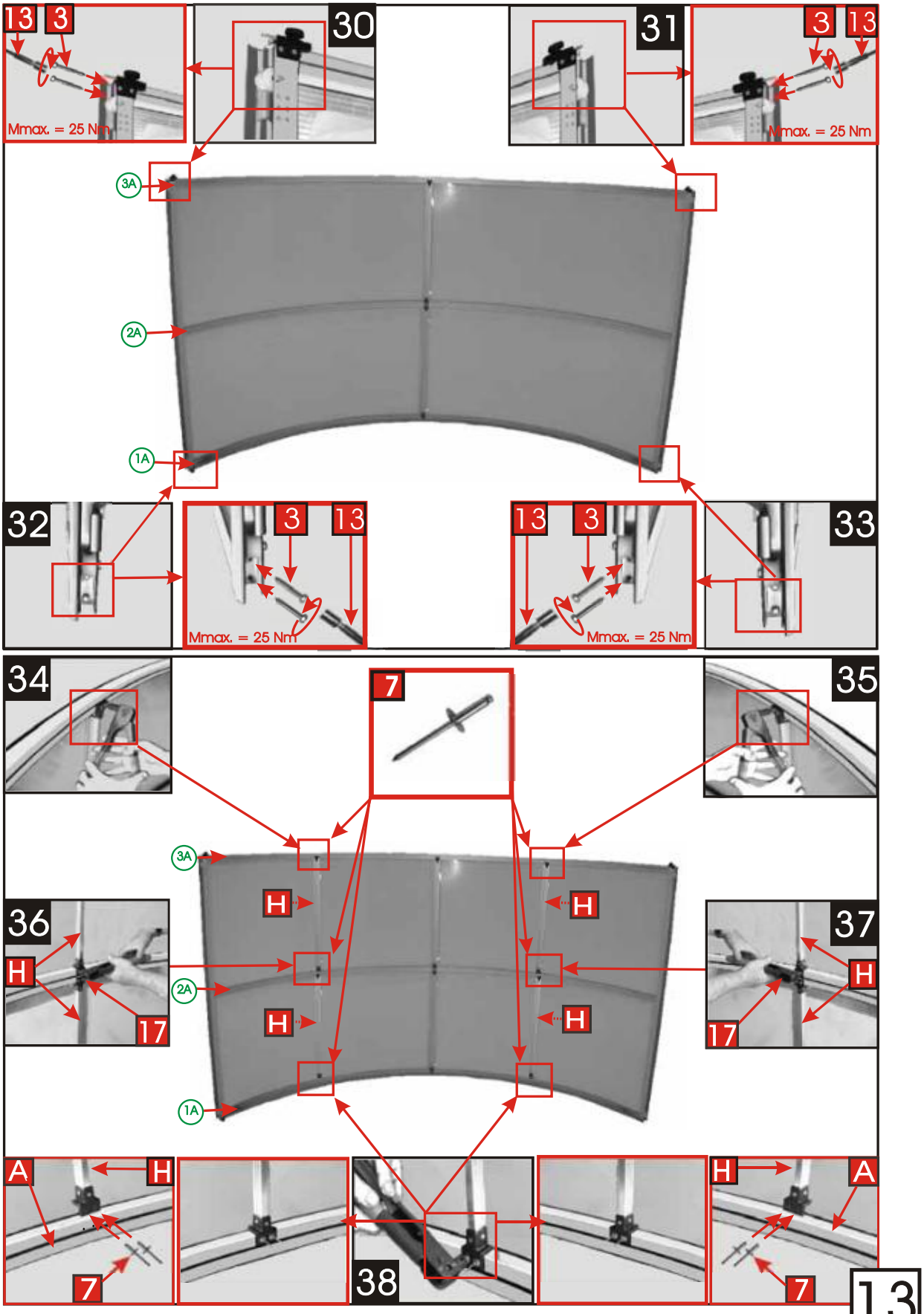
13
3
Mmax. = 25 Nm
30
31
3
13
Mmax. = 25 Nm
3A
2A
1A
32
3
13
Mmax. = 25 Nm
13
3
Mmax. = 25 Nm
33
34
7
35
3A
H
H
36
H
17
2A
H
H
37
H
17
1A
A
H
7
38
H
A
7

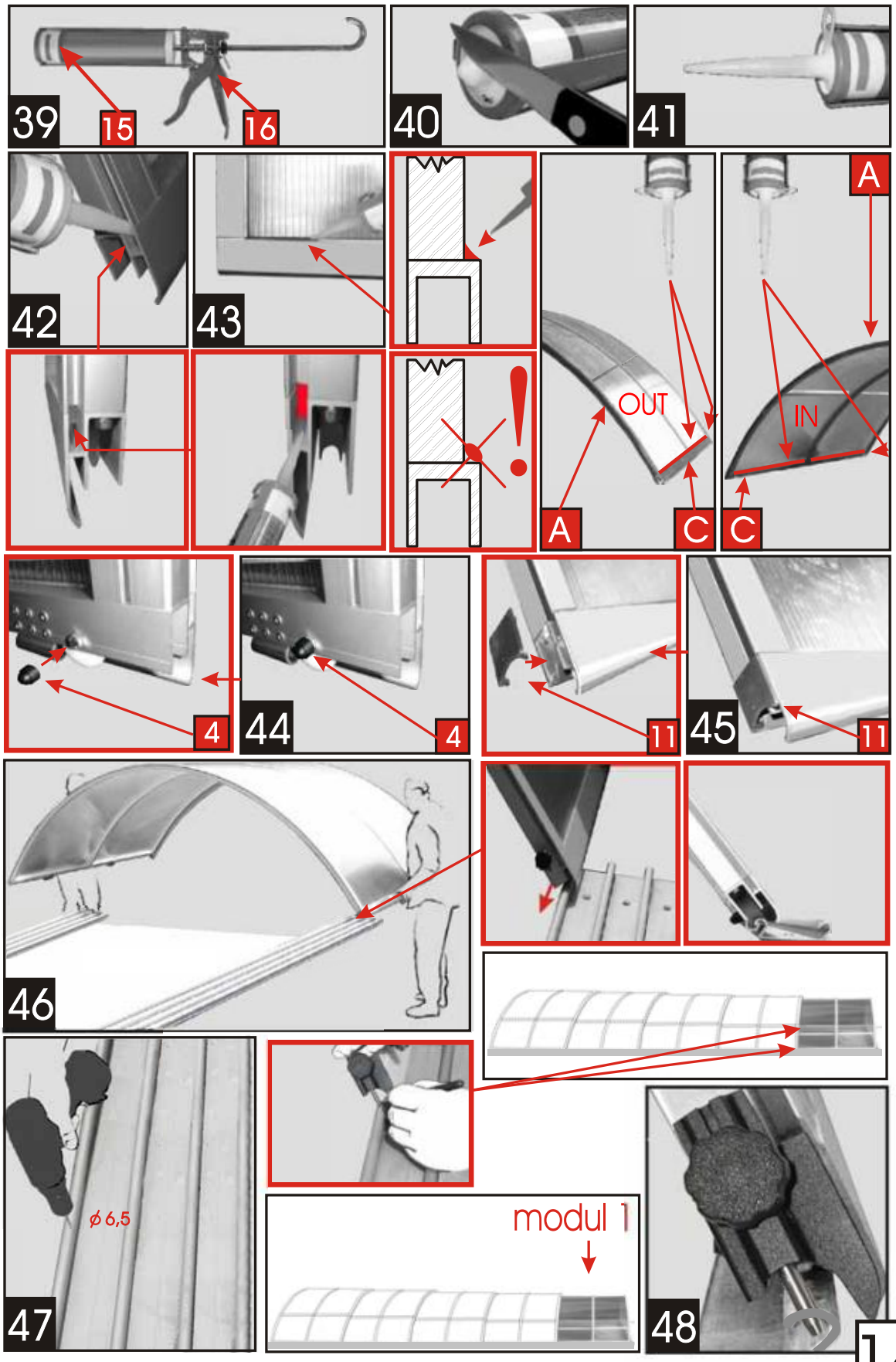
39
15
16
40
41
42
43
OUT
IN
A
C
C
A
4
4
44
11
45
11
46
ø 6,5
47
modul 1
48

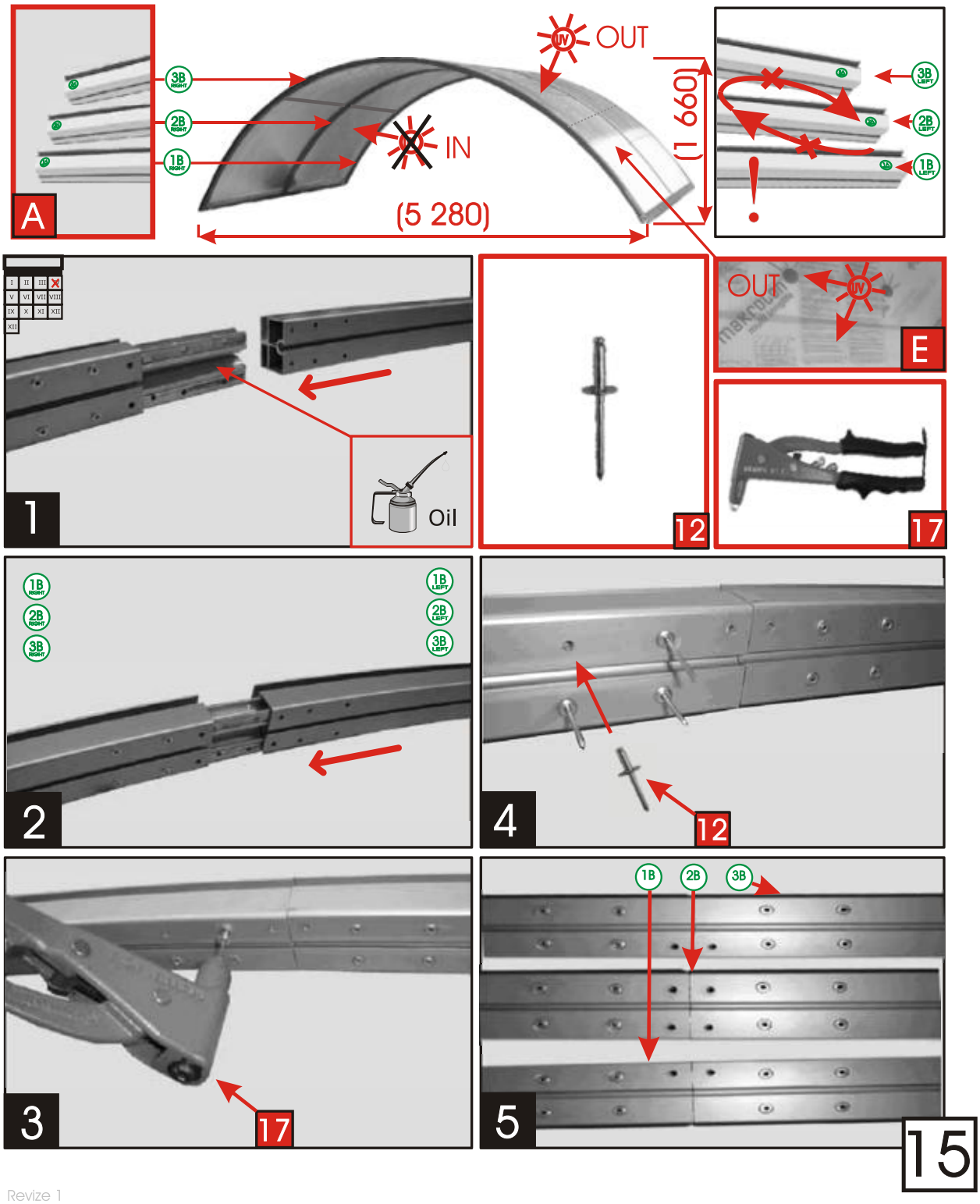
A
3B RIGHT
2B RIGHT
1B RIGHT
OUT
IV
IN
(1 660)
(5 280)
3B LEFT
2B LEFT
1B LEFT
!
1
Oil
12
OUT
IV
E
17
2
1B RIGHT
2B RIGHT
3B RIGHT
1B LEFT
2B LEFT
3B LEFT
4
12
3
17
5
1B
2B
3B
15

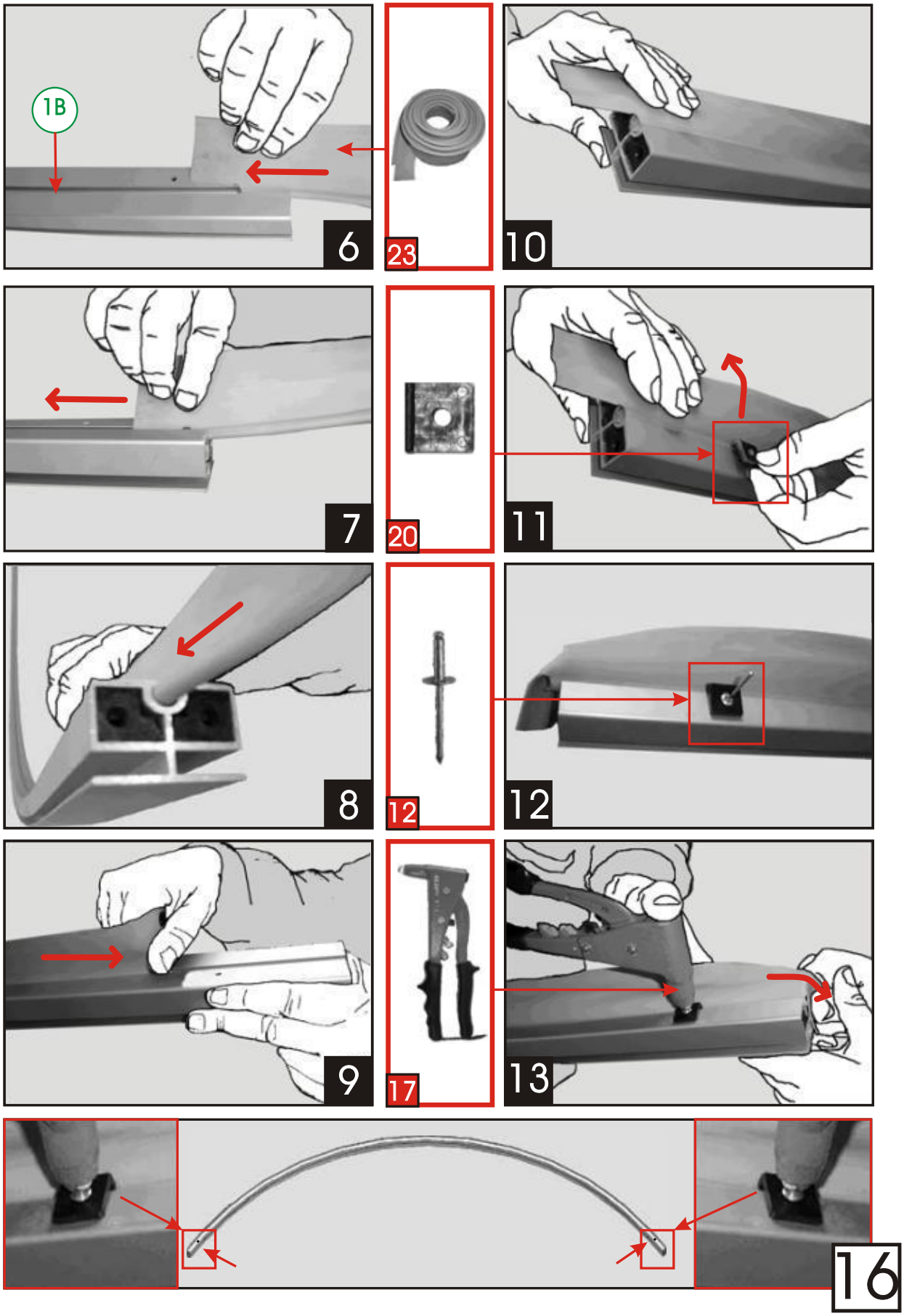
1B
6
23
10
7
20
11
8
12
12
9
17
13
16

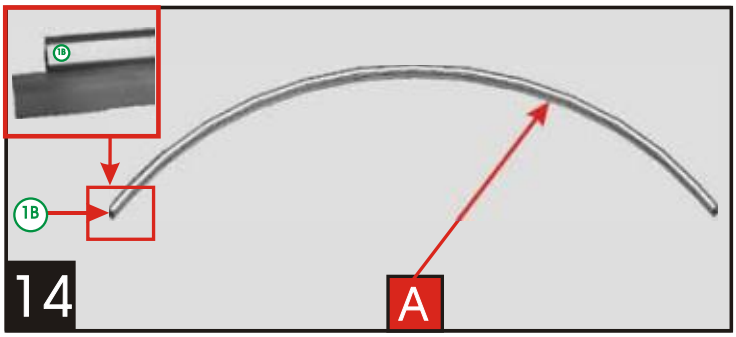
1B
1B
14
A

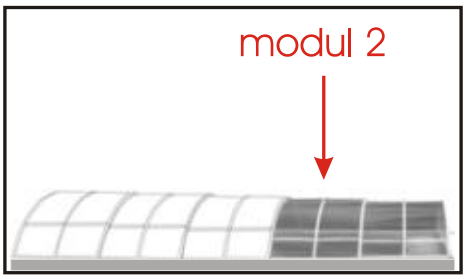
modul 2

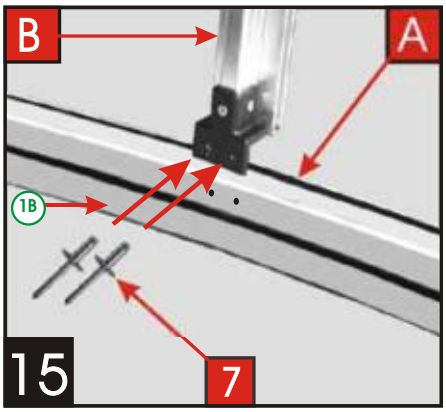
B
A
1B
15
7

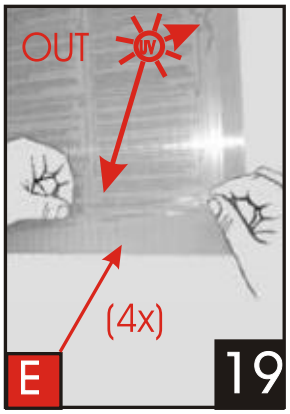
OUT
(4x)
E
19

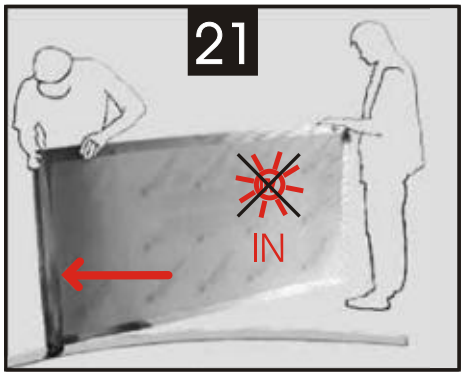
21
IN

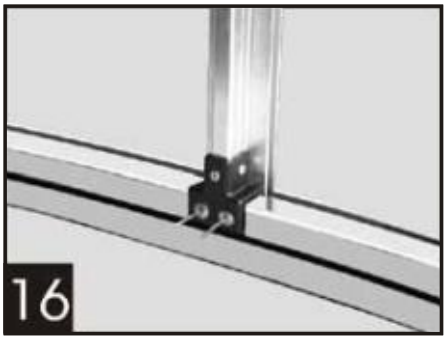
16

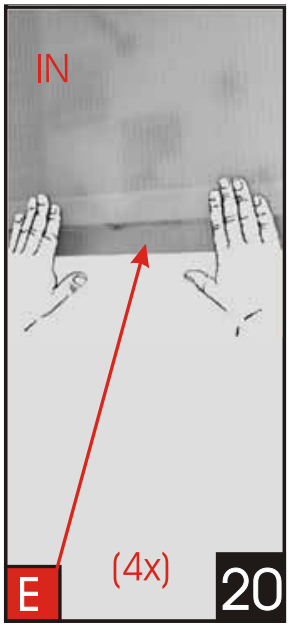
IN
(4x)
E
20

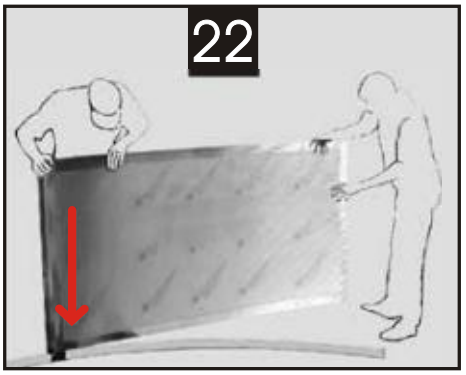
22

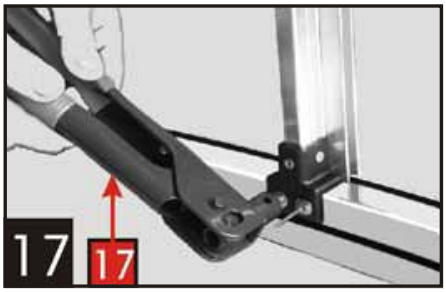
17
17

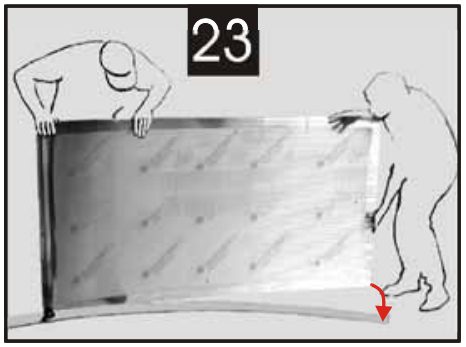
23

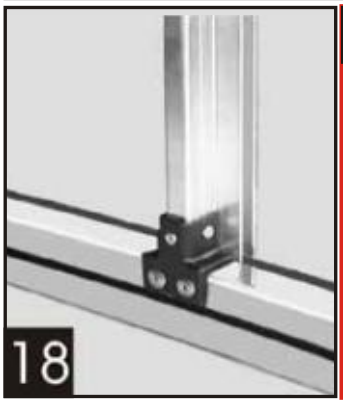
18

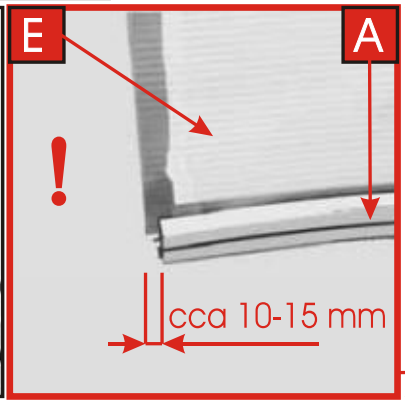
E
A
!
cca 10-15 mm

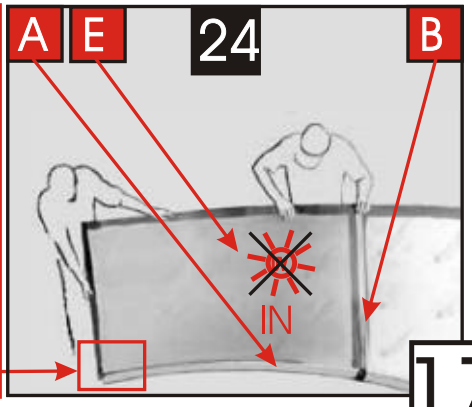
A
E
24
B
IN

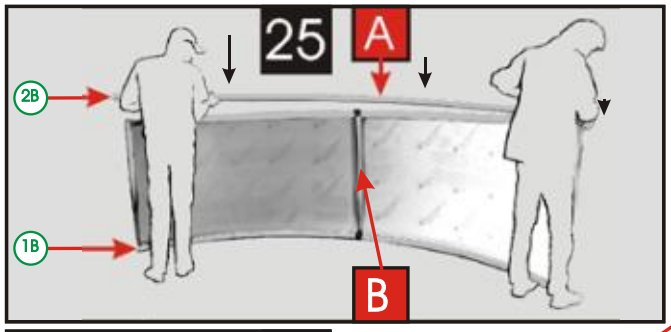
25
A
2B
1B
B

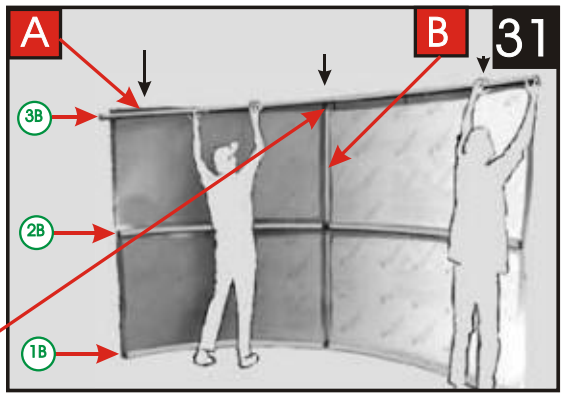
A
B
31
3B
2B
1B

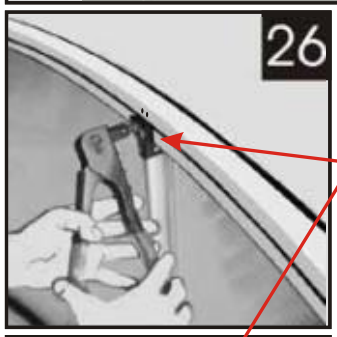
26

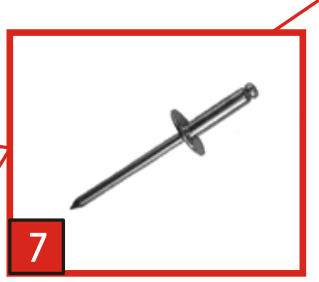
7

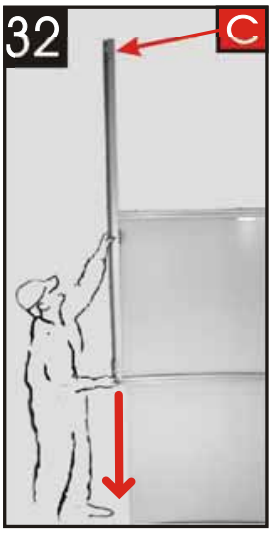
32
C

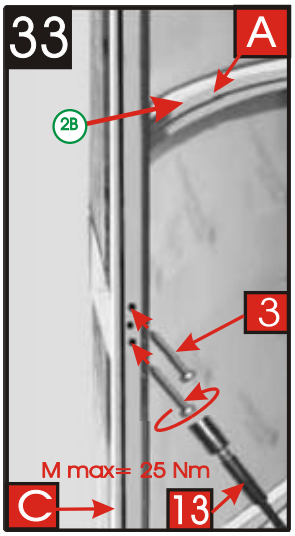
33
A
2B
3
M max= 25 Nm
C
13

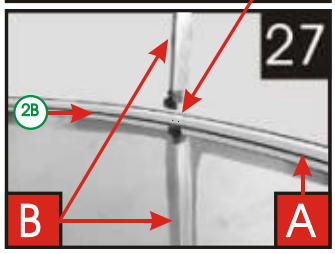
27
2B
B
A

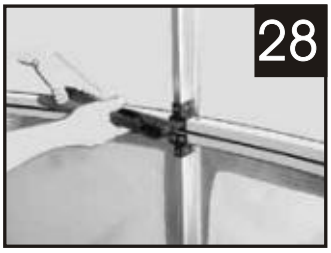
28

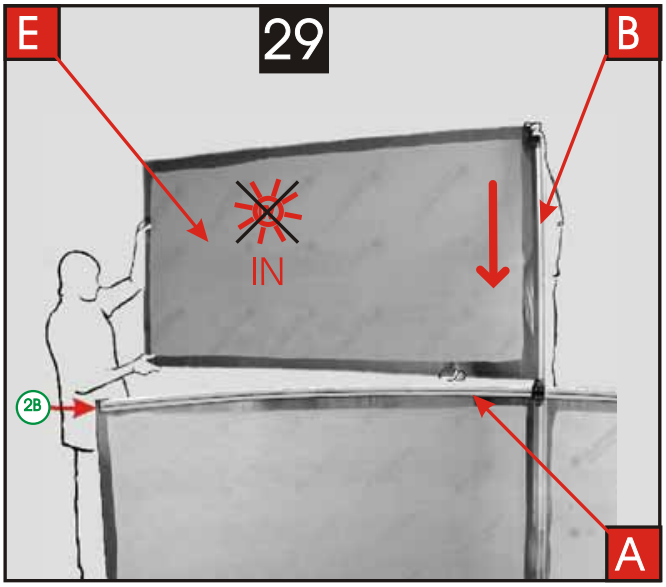
E
29
B
IN
2B
A

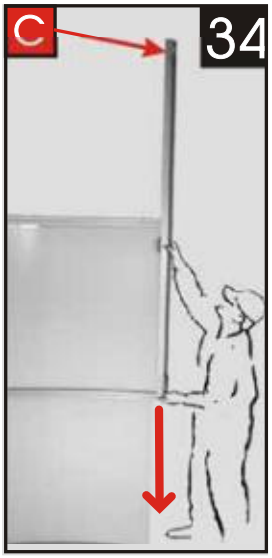
C
34

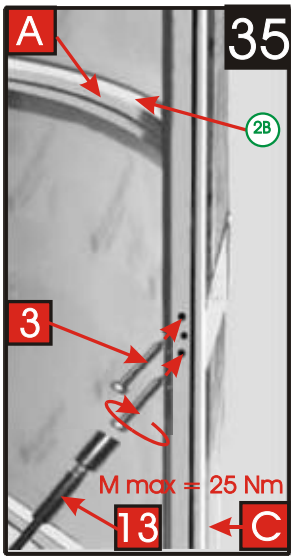
A
35
2B
3
M max = 25 Nm
13
C

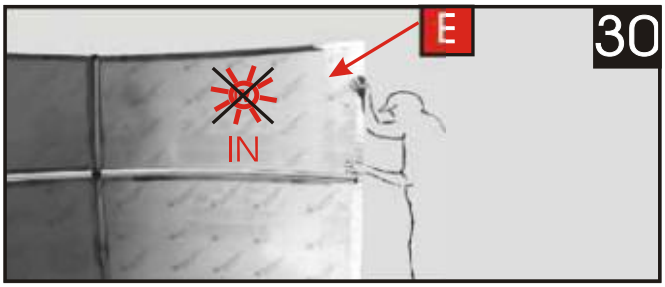
E
30
IN

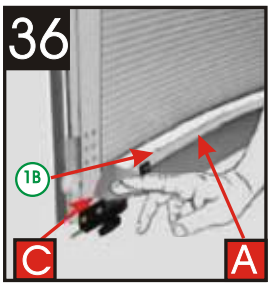
36
1B
C
A

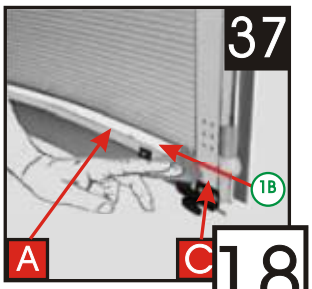
37
1B
A
C

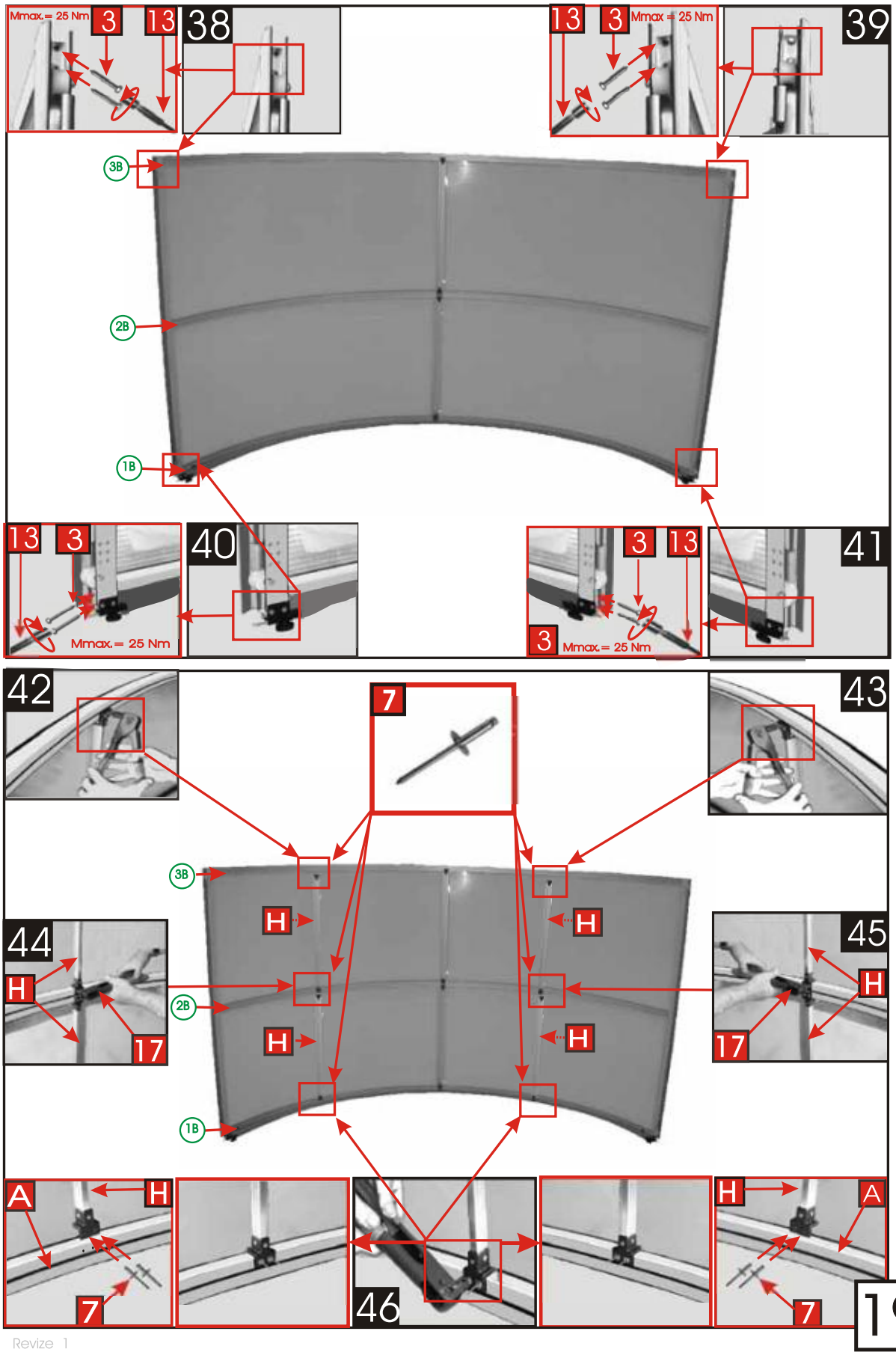
Mmax.= 25 Nm
3
13
38
39
3B
2B
1B
40
41
42
43
7
44
H
17
45
46
A
19

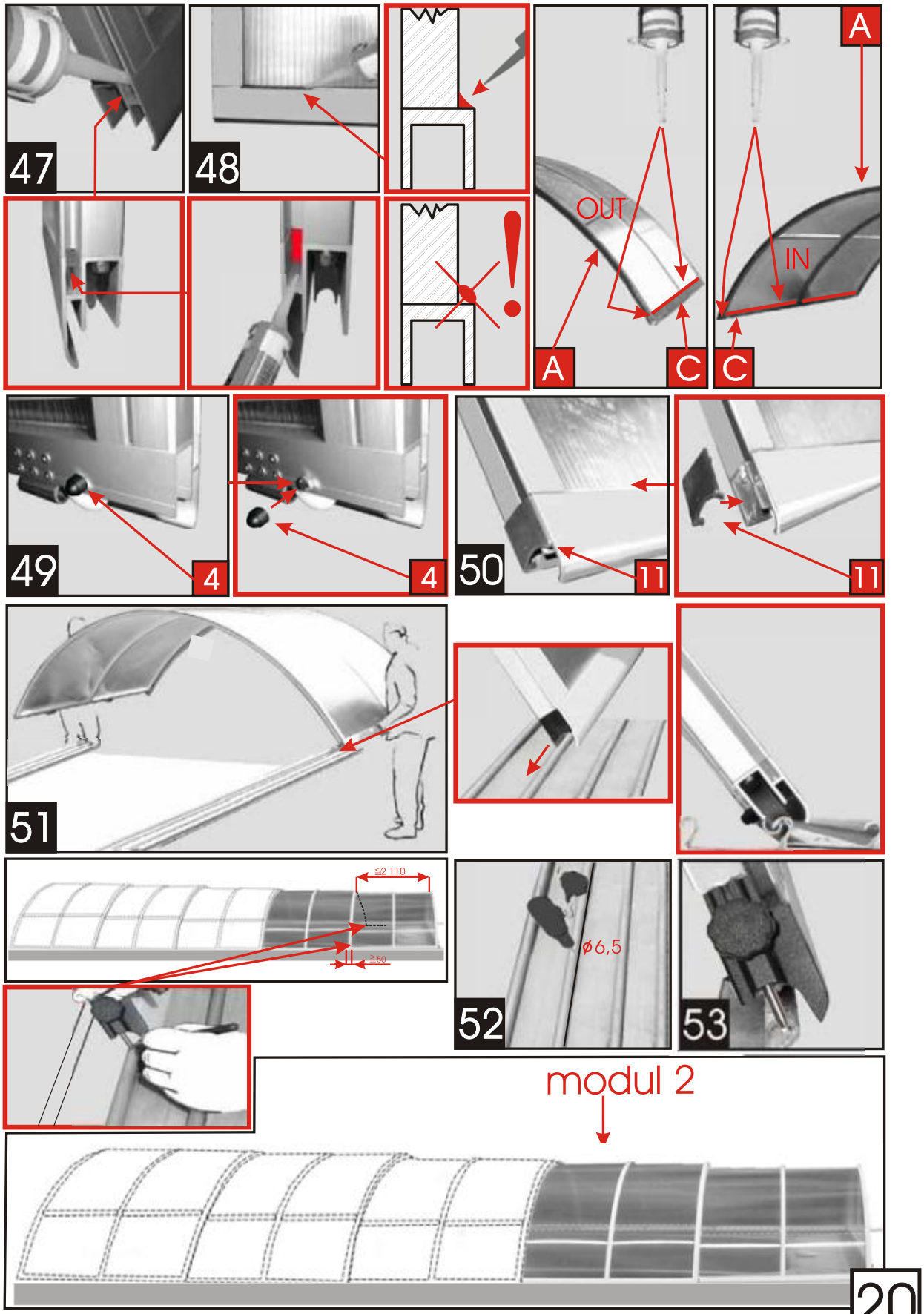
47
48
OUT
A
C
A
IN
C
49
4
4
50
11
11
51
≤2 110
≥50
ø6,5
52
53
modul 2
20

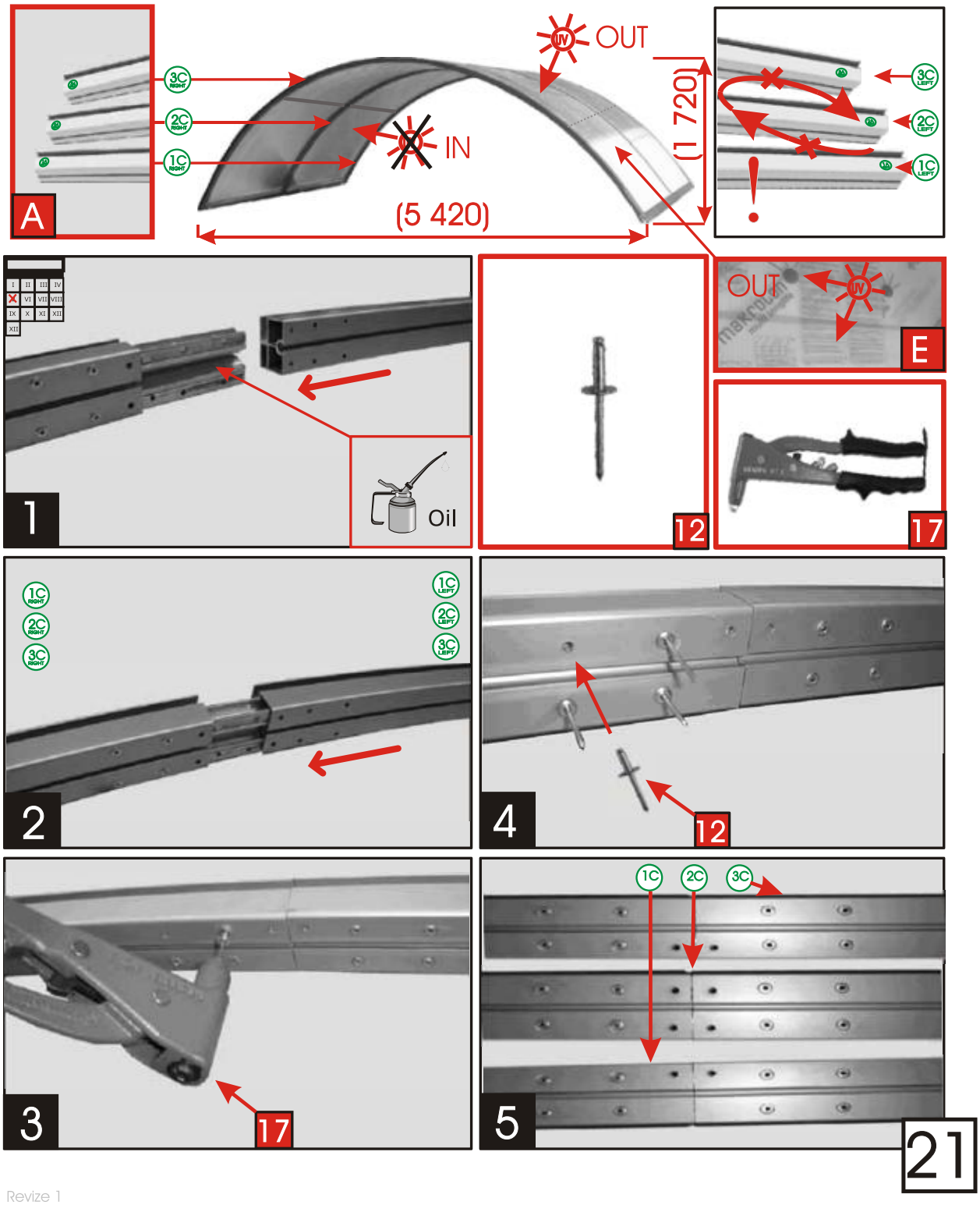
A
3C RIGHT
2C RIGHT
1C RIGHT
OUT
IN
(1 720)
(5 420)
3C LEFT
2C LEFT
1C LEFT
!
1
Oil
12
OUT
E
17
2
1C RIGHT
2C RIGHT
3C RIGHT
1C LEFT
2C LEFT
3C LEFT
4
12
3
17
5
1C
2C
3C
21

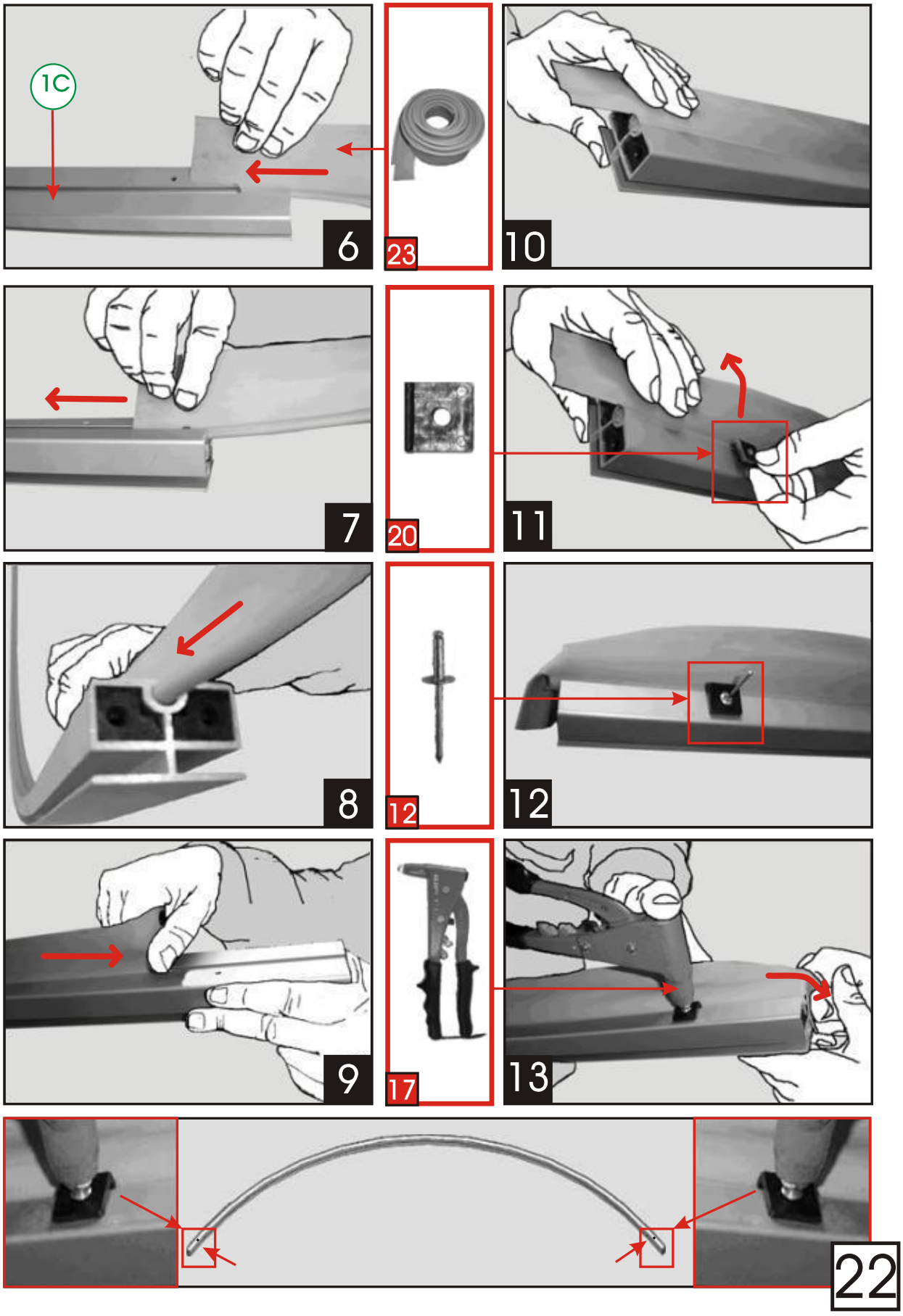
1C
6
23
10
7
20
11
8
12
12
9
17
13
22

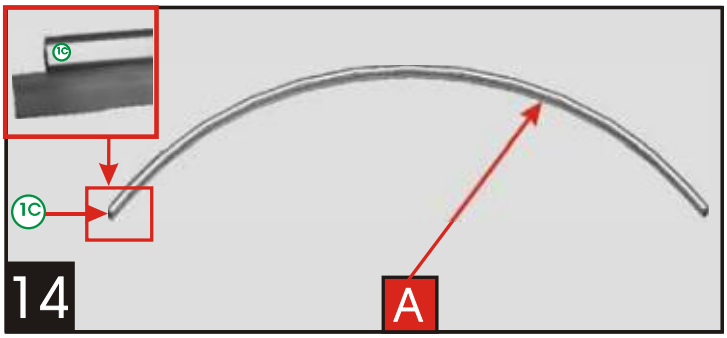
1C
1C
14
A

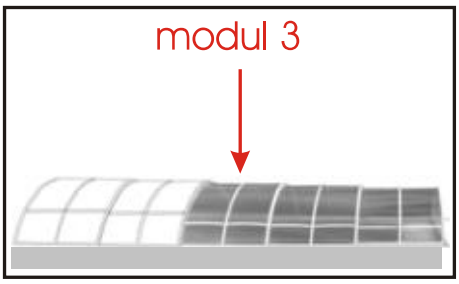
modul 3

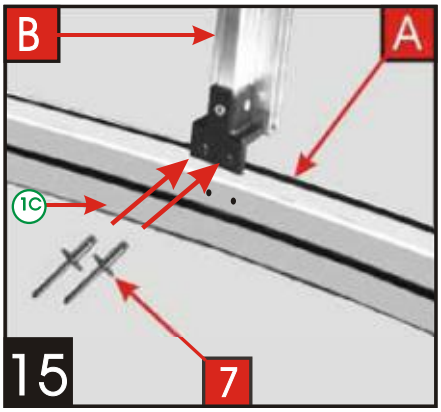
B
A
1C
15
7

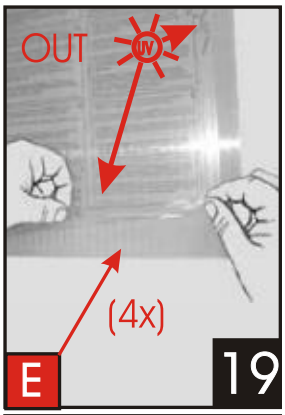
OUT
(4x)
E
19

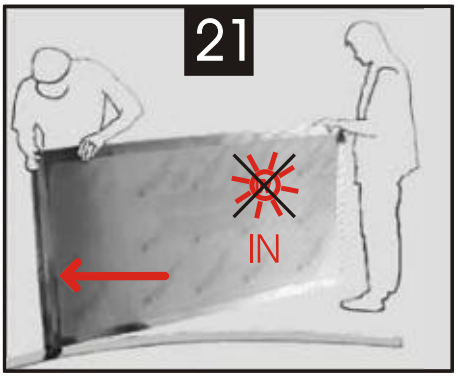
21
IN

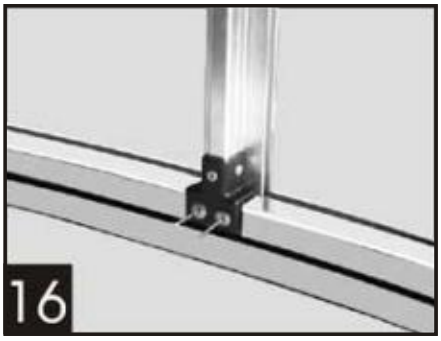
16

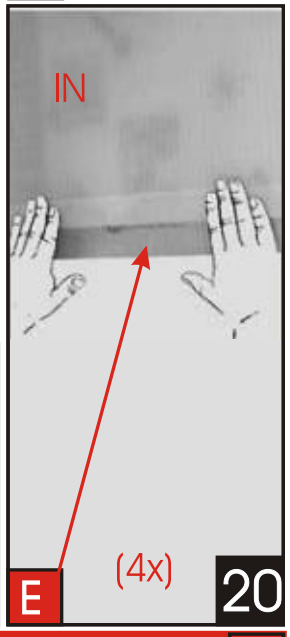
IN
(4x)
E
20

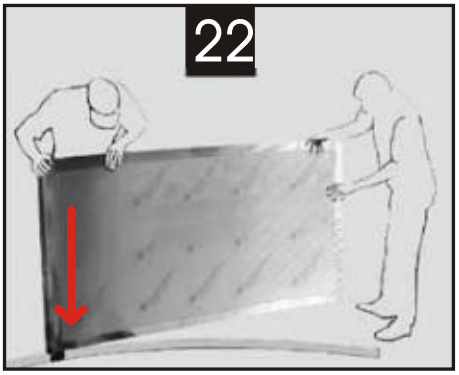
22

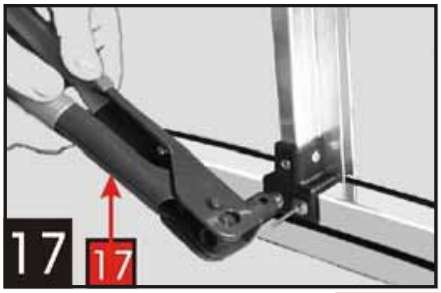
17
17

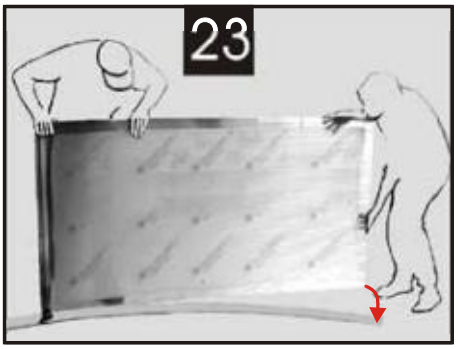
23

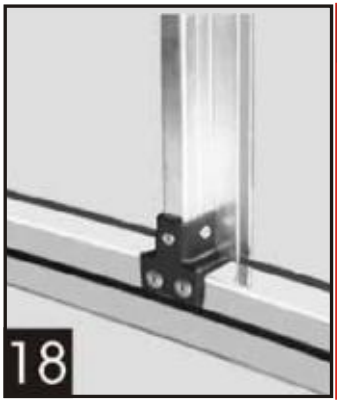
18

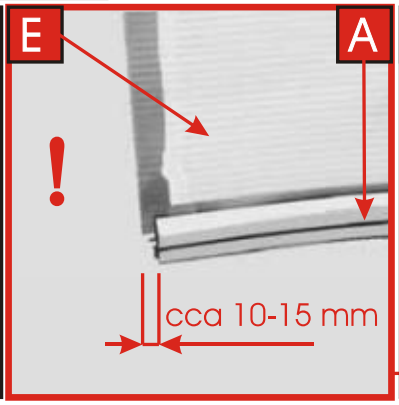
E
A
!
cca 10-15 mm

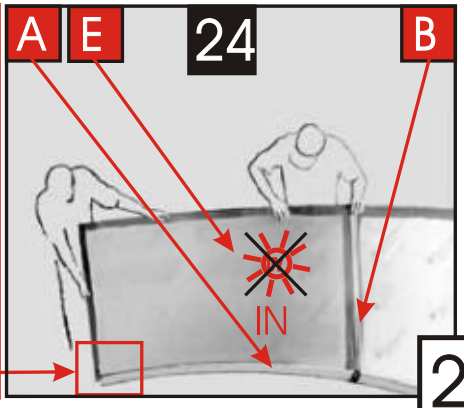
A
E
24
B
IN

Revize 1

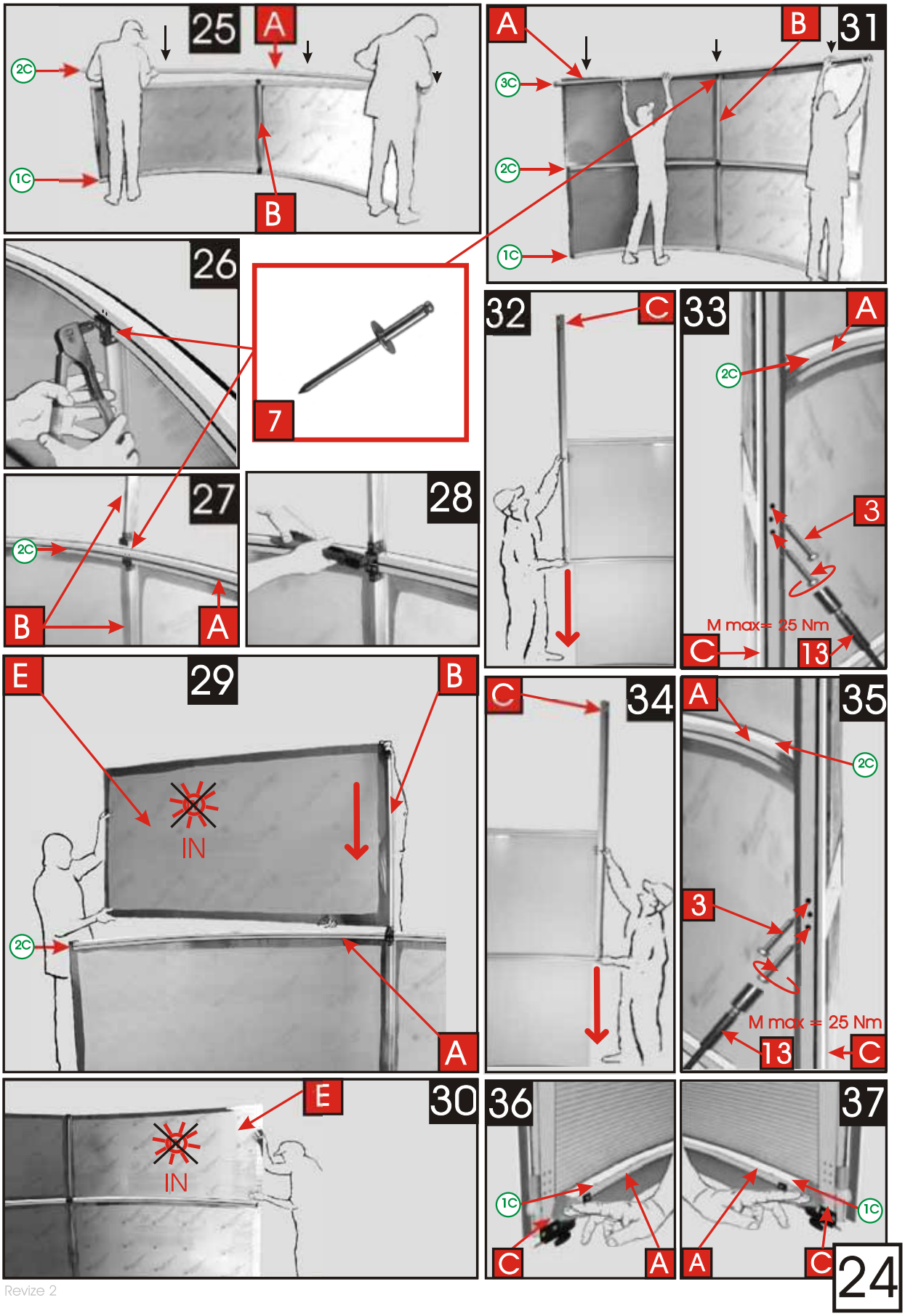
25
A
2C
1C
B
26
7
27
2C
B
A
28
29
E
B
IN
2C
A
30
E
IN
31
A
B
3C
2C
1C
32
C
33
A
2C
3
M max= 25 Nm
C
13
34
C
35
A
2C
3
M max = 25 Nm
13
C
36
1C
C
A
37
A
1C
C

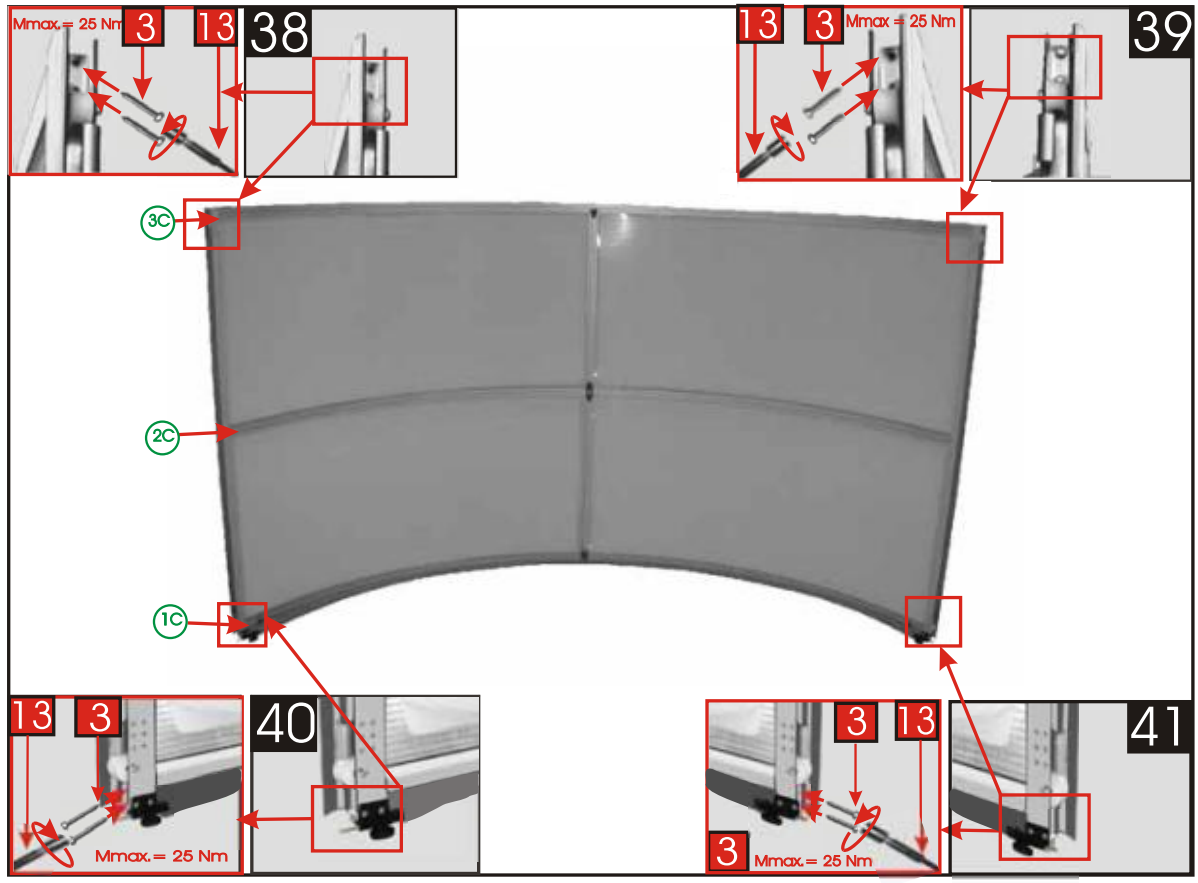
Mmax.= 25 Nm
3
13
38
13
3
Mmax.= 25 Nm
39
3C
2C
1C
13
3
40
3
13
41
Mmax.= 25 Nm
3
Mmax.= 25 Nm

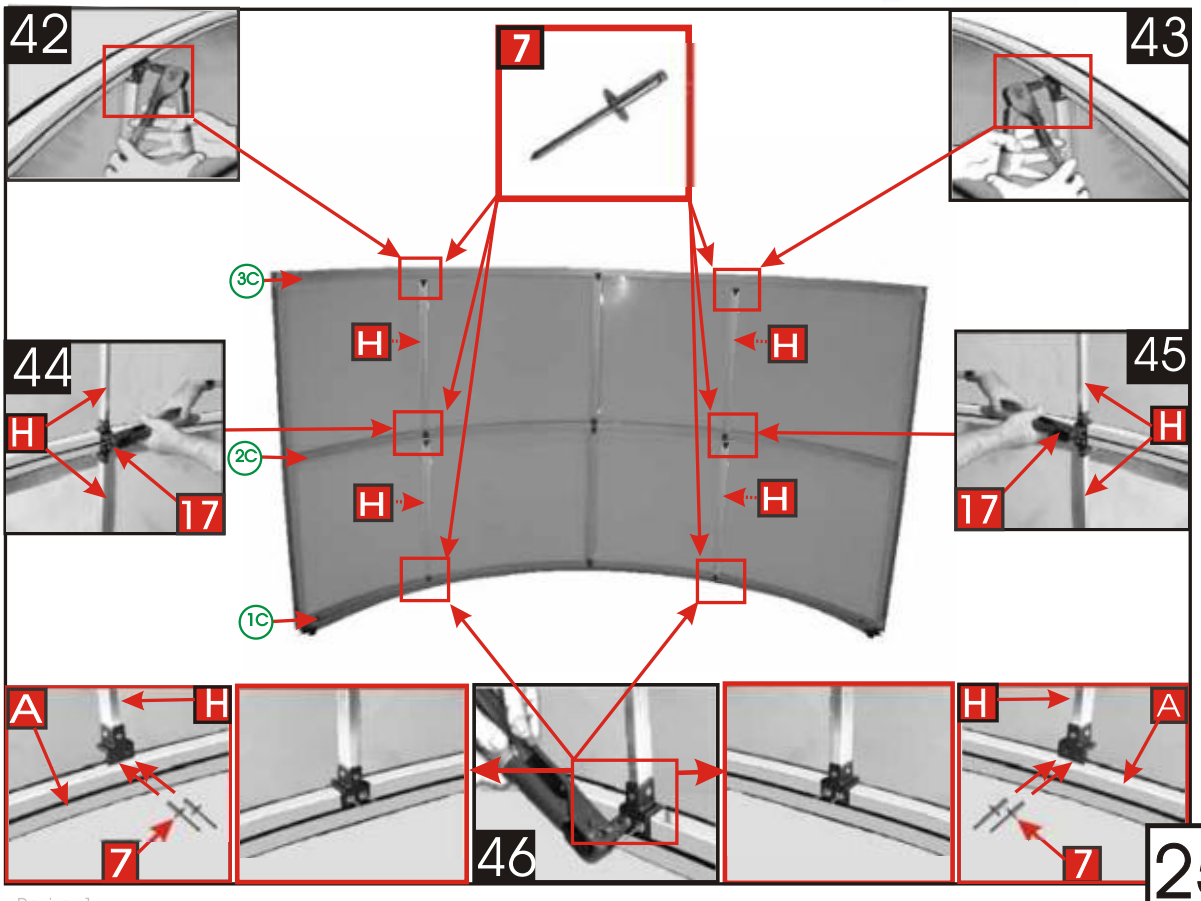
42
7
43
3C
H
H
44
H
17
2C
H
H
45
H
17
1C
A
H
7
46
H
A
7

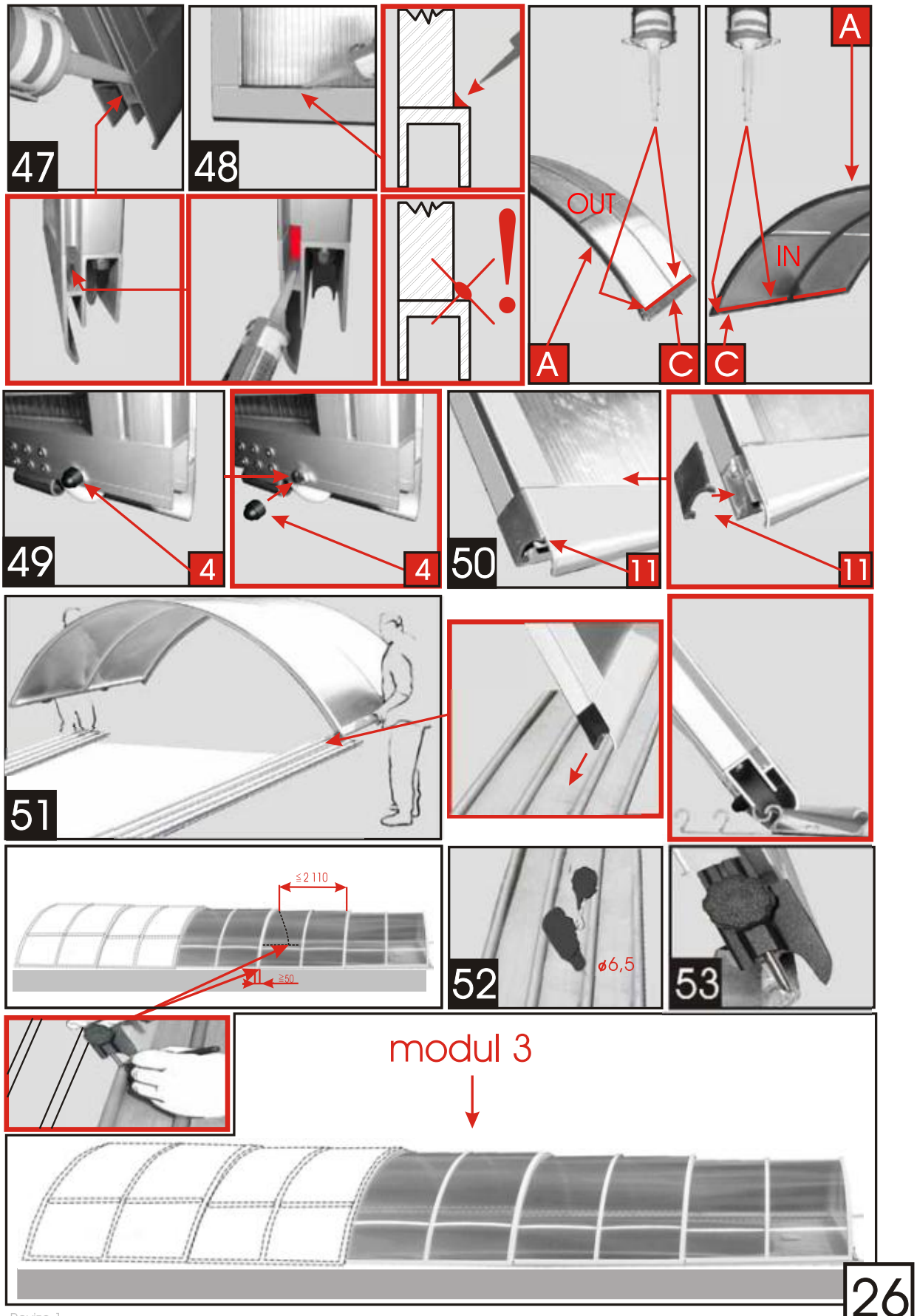
47
48
OUT
IN
A
C
C
49
4
4
50
11
11
51
52
≤2 110
≥50
ø6,5
53
modul 3

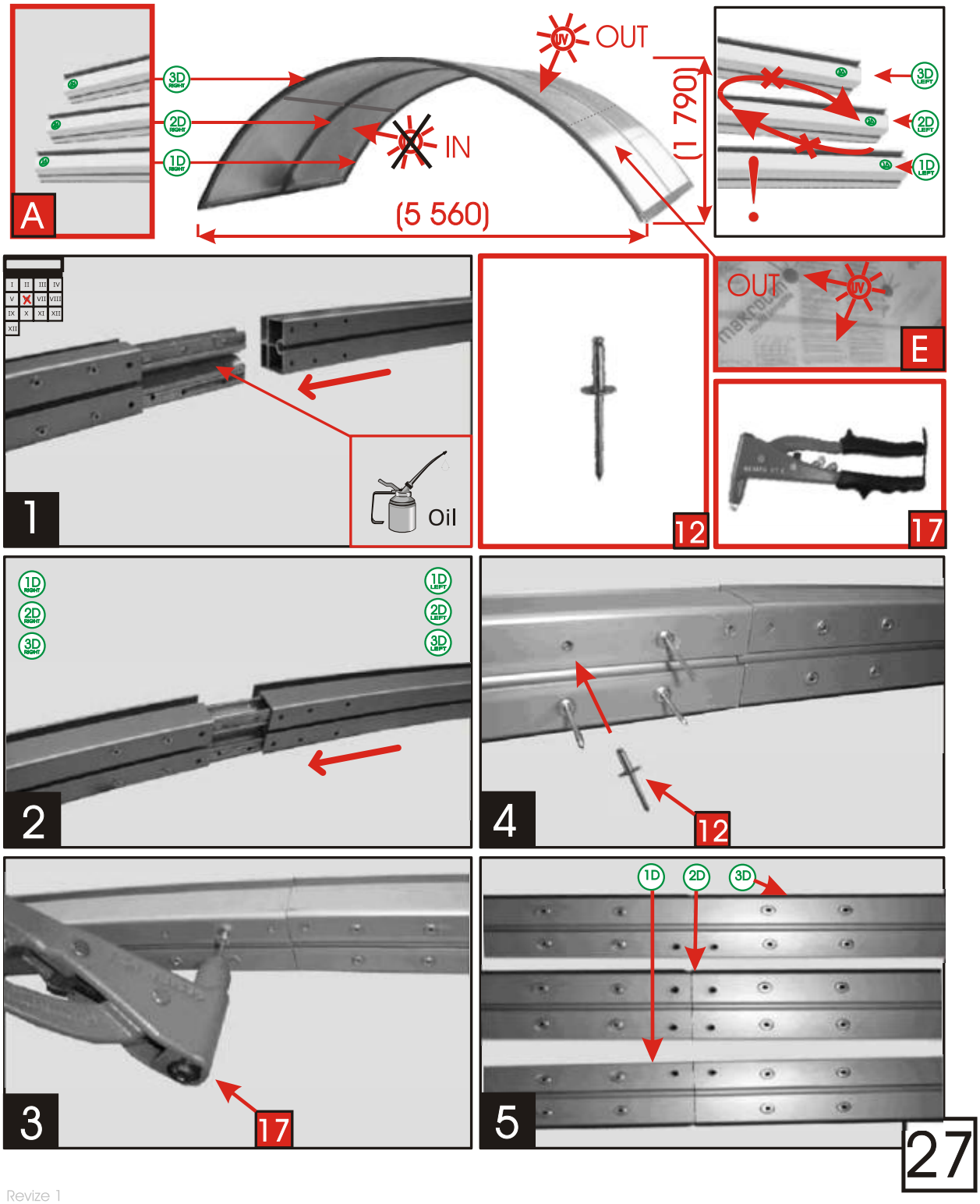
A
3D RIGHT
2D RIGHT
1D RIGHT
OUT
IN
(1 790)
(5 560)
3D LEFT
2D LEFT
1D LEFT
1
Oil
12
OUT
E
17
2
4
12
3
17
5
1D
2D
3D
27

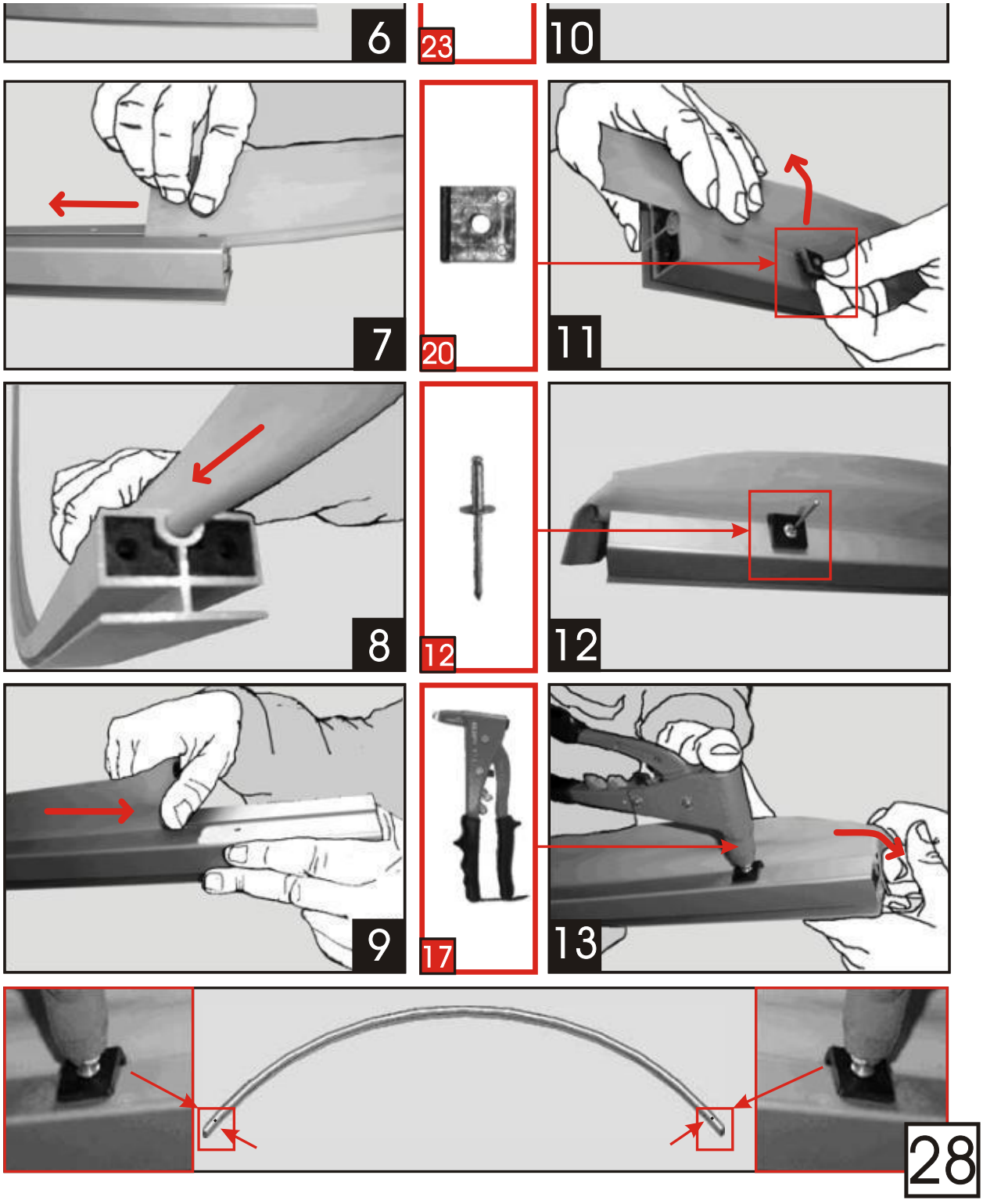
6
23
10
7
20
11
8
12
12
9
17
13
28

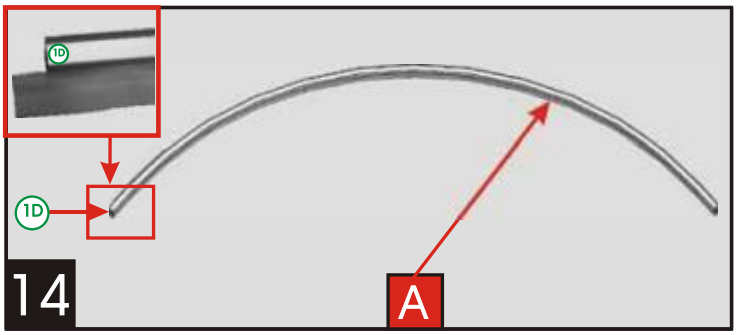
1D
1D
14
A

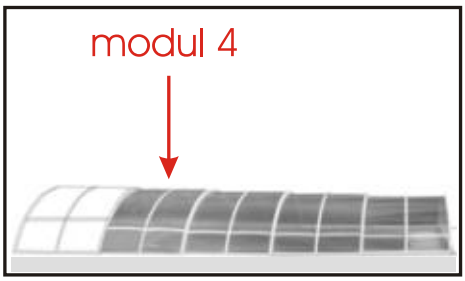
modul 4

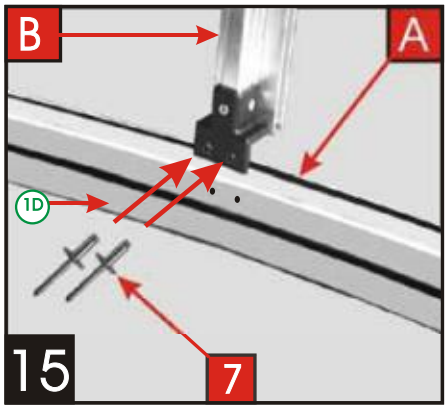
B
A
1D
15
7

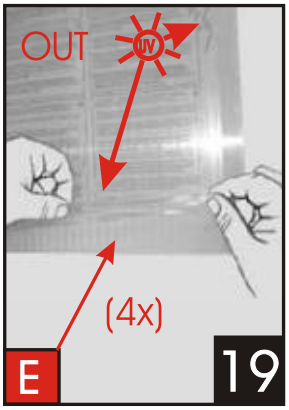
OUT
(4x)
E
19

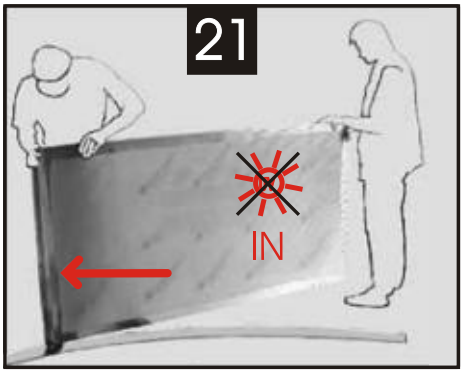
21
IN

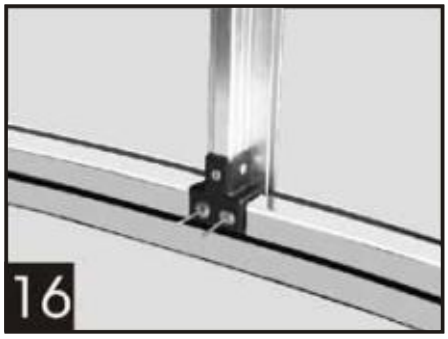
16

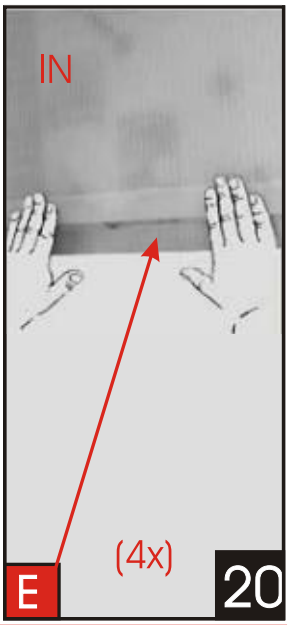
IN
(4x)
E
20

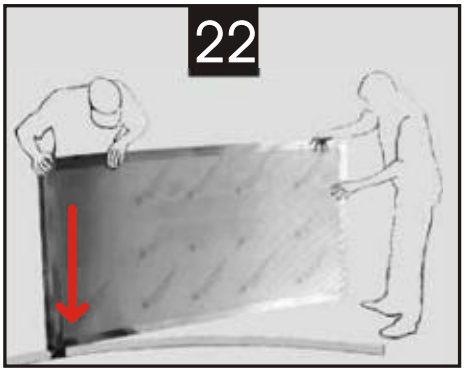
22

17
17

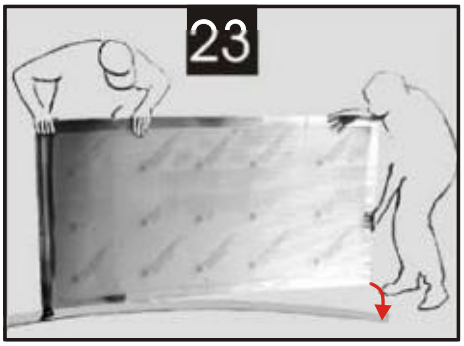
23

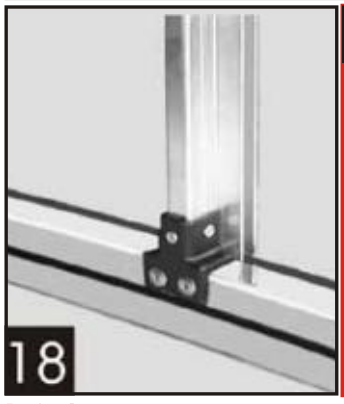
18

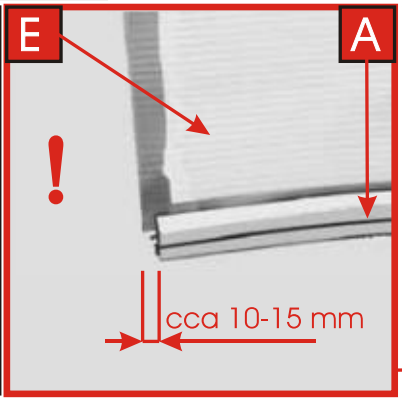
E
A
!
cca 10-15 mm

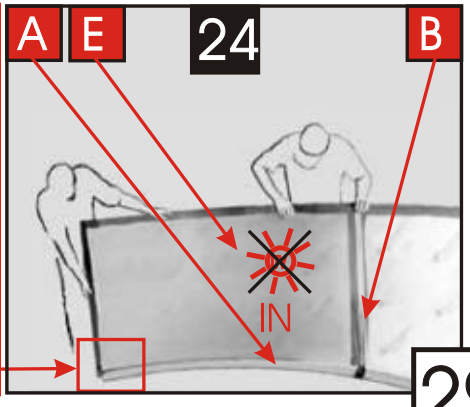
A
E
24
B
IN

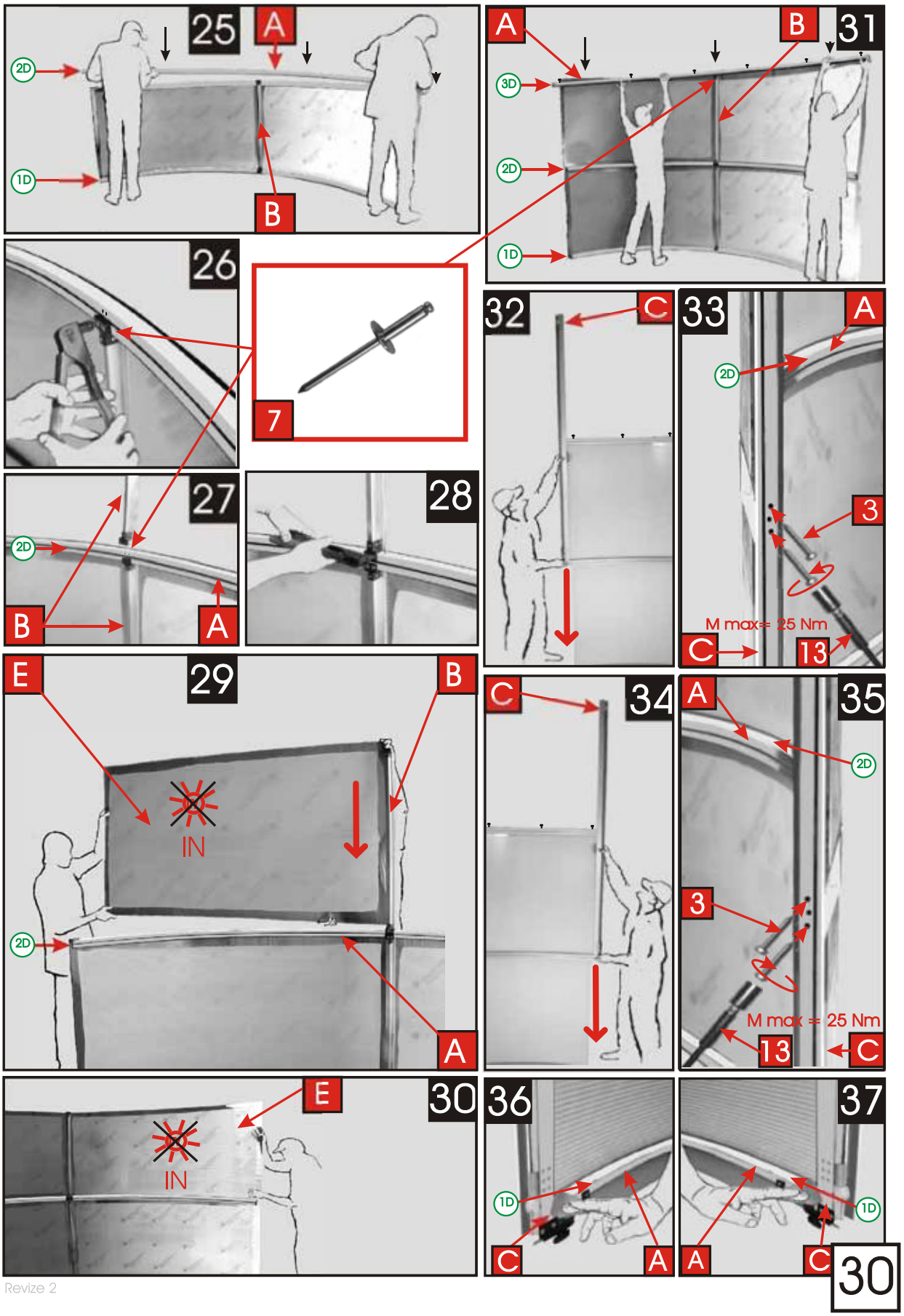
25
A
2D
1D
B
31
A
B
3D
2D
1D
26
7
32
C
33
A
2D
3
M max= 25 Nm
C
13
27
2D
B
A
28
29
E
B
IN
2D
A
34
C
35
A
2D
3
M max = 25 Nm
13
C
30
E
IN
36
1D
C
A
37
A
1D
C

30

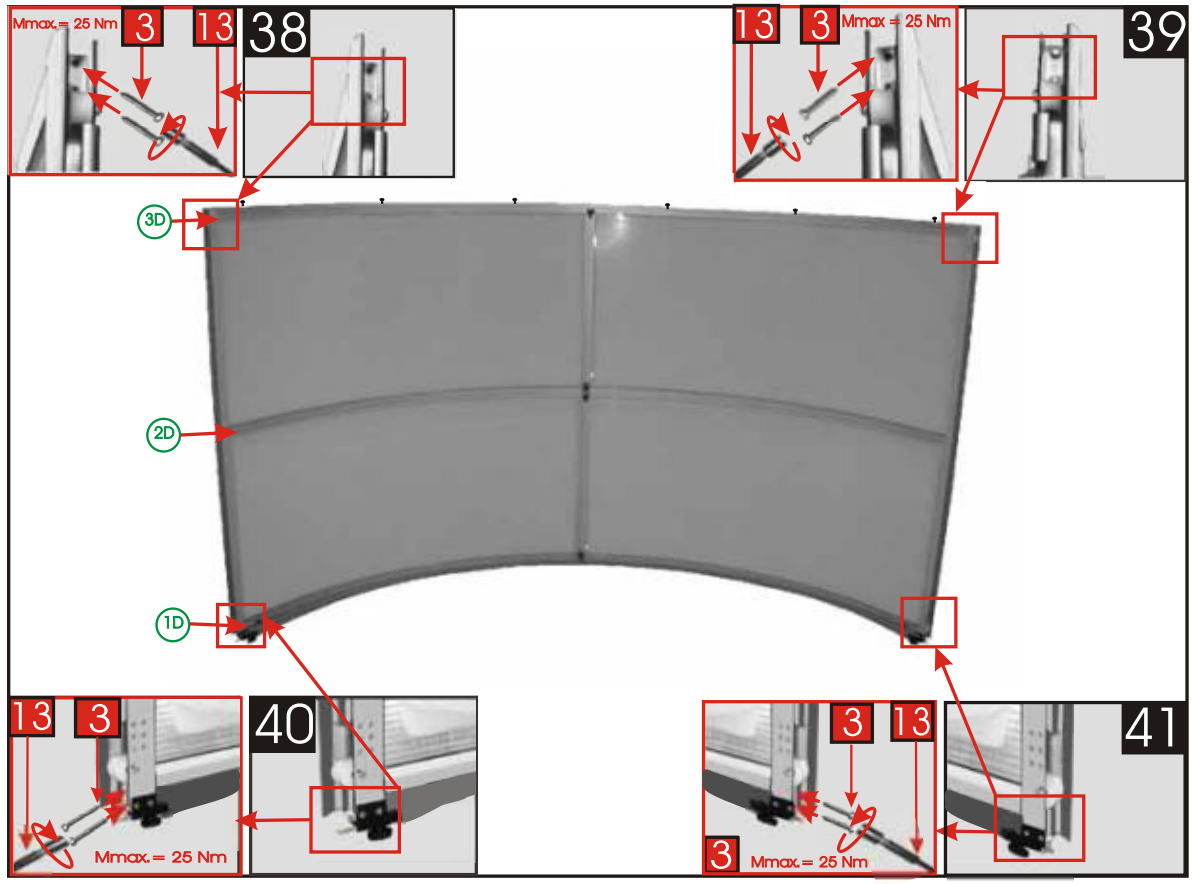
Mmax.= 25 Nm
3
13
38
13
3
Mmax.= 25 Nm
39
3D
2D
1D
13
3
40
Mmax.= 25 Nm
3
13
3
Mmax.= 25 Nm
41

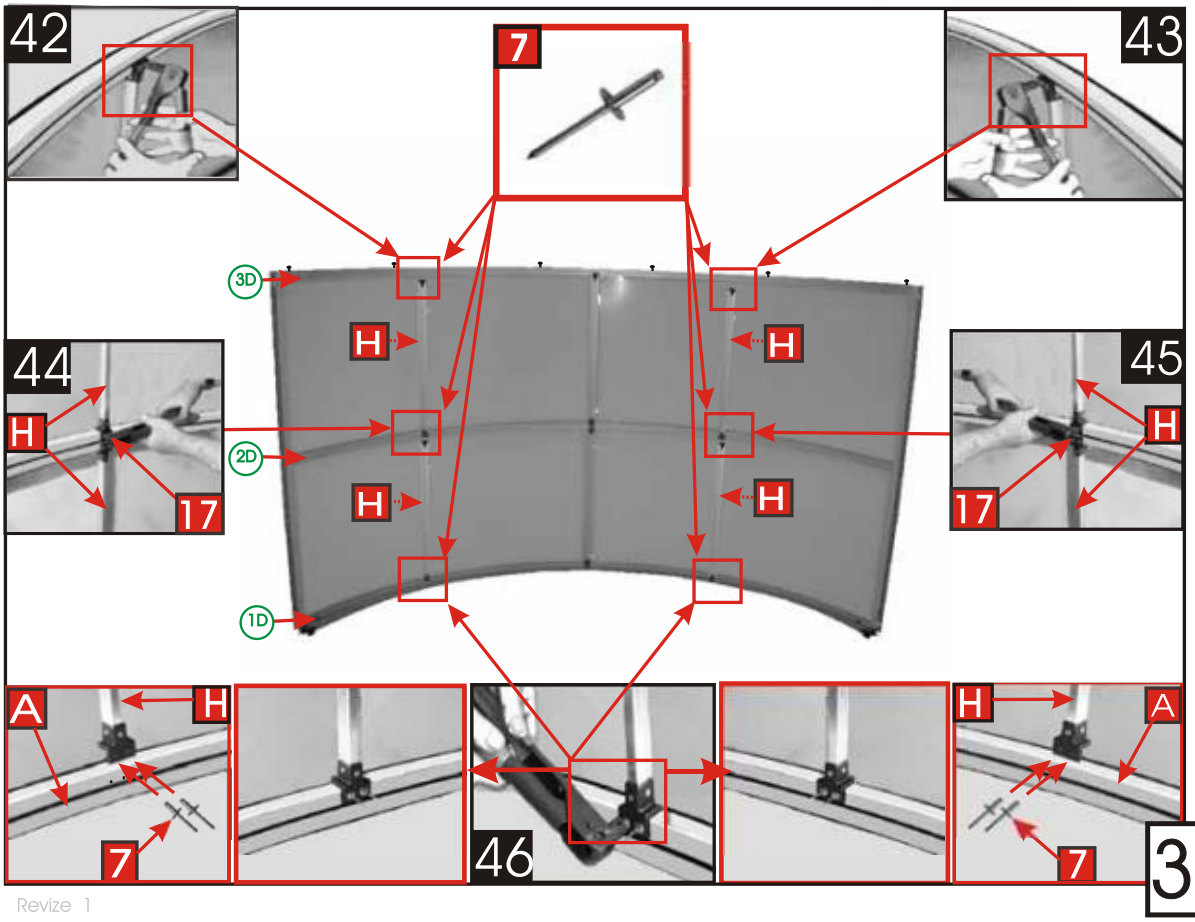
42
7
43
3D
H
H
44
H
17
2D
H
H
45
H
17
1D
A
H
7
46
H
A
7

Revize 1

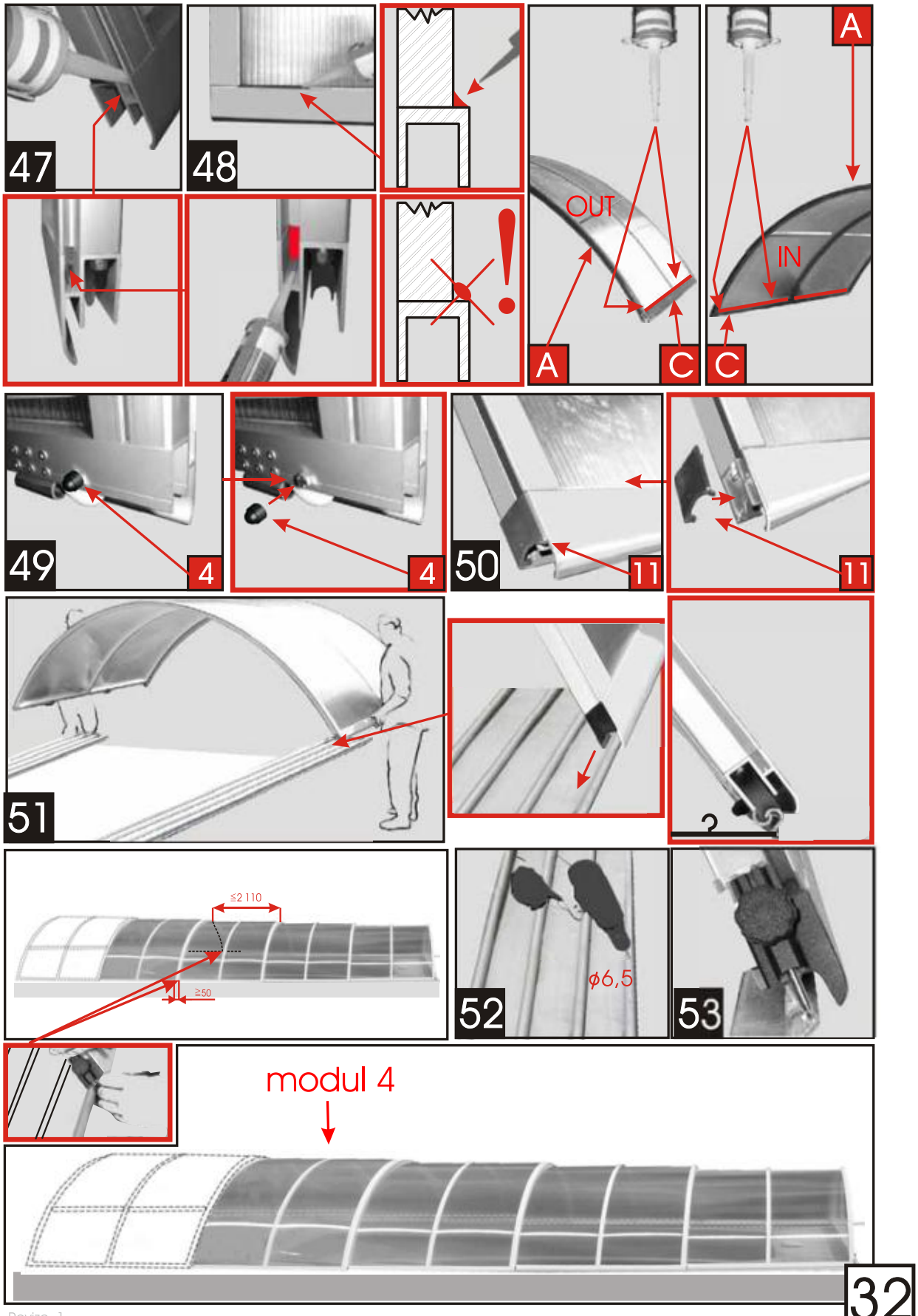
47
48
OUT
IN
A
C
C
49
4
4
50
11
11
51
2
≤2 110
≥50
52
ϕ6,5
53
modul 4
32

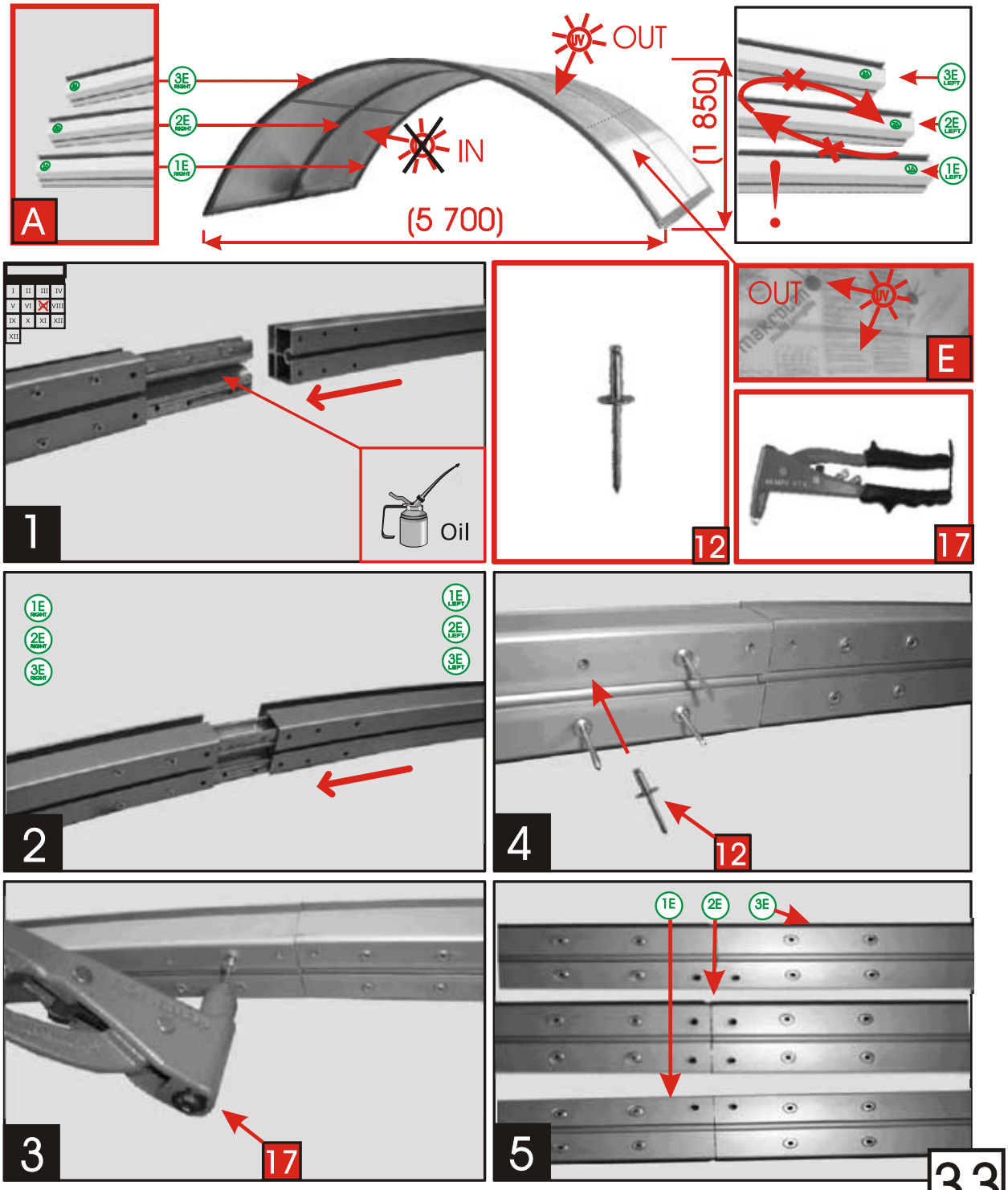
A
3E RIGHT
2E RIGHT
1E RIGHT
OUT
IV
IN
(5 700)
(1 850)
3E LEFT
2E LEFT
1E LEFT
1
Oil
12
OUT
IV
E
17
2
4
12
3
17
5
1E
2E
3E

33

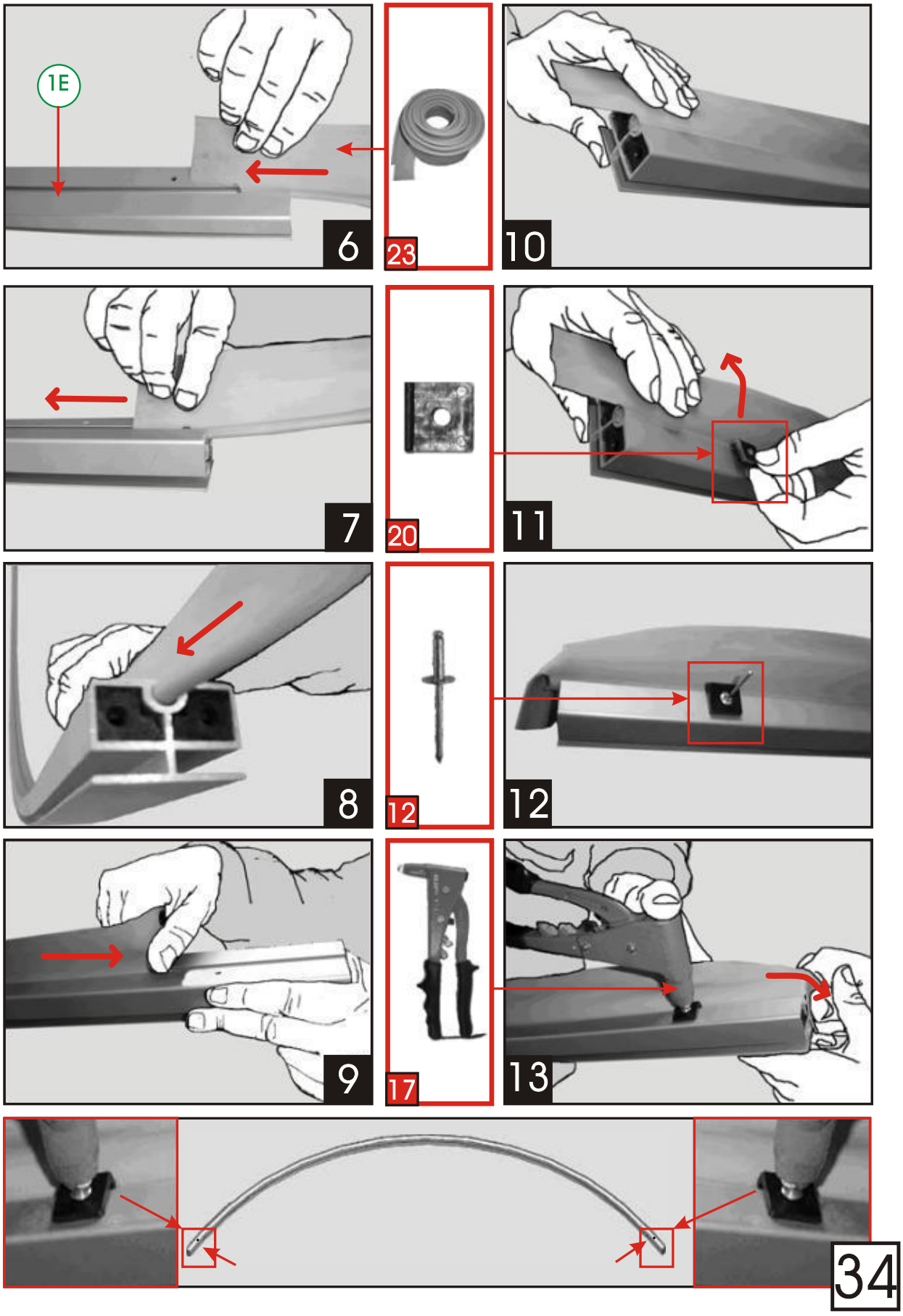
1E
6
23
10
7
20
11
8
12
12
9
17
13
34

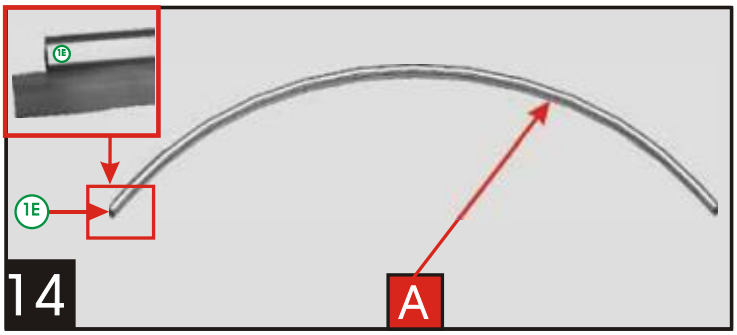
1E
1E
14
A

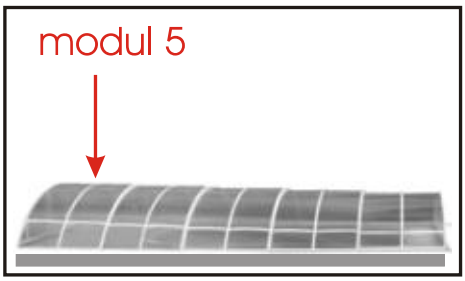
modul 5

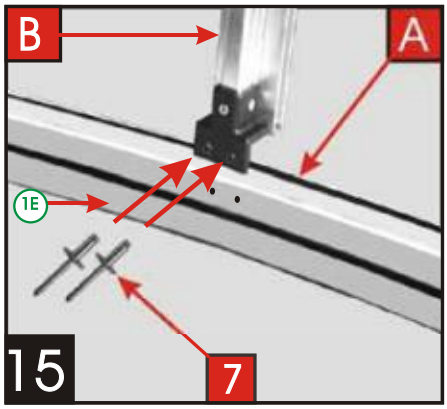
B
A
1E
15
7

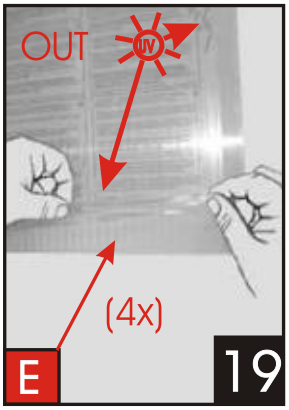
OUT
(4x)
E
19

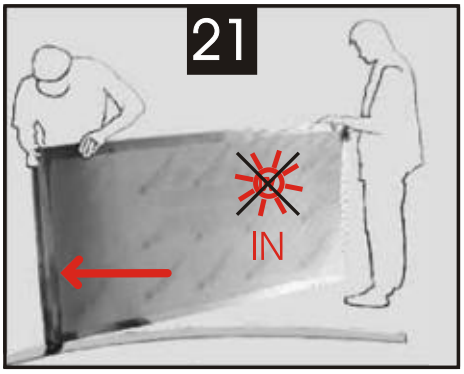
21
IN

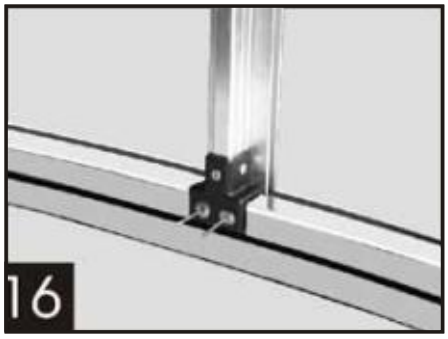
16

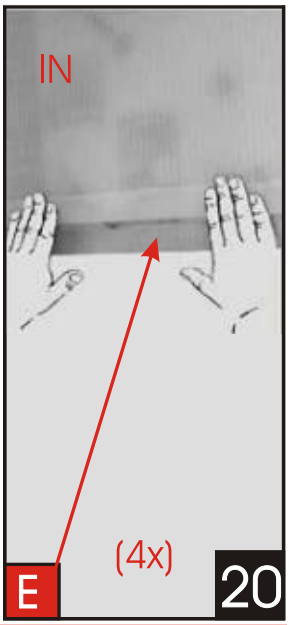
IN
(4x)
E
20

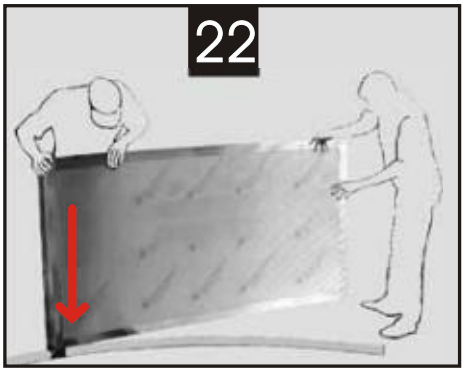
22

17
17

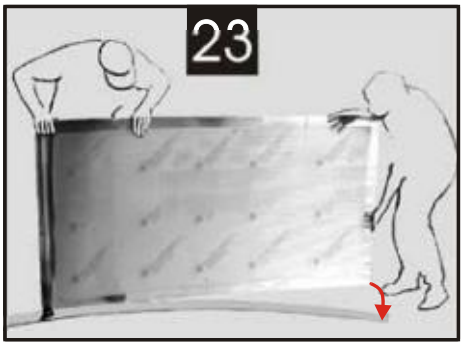
23

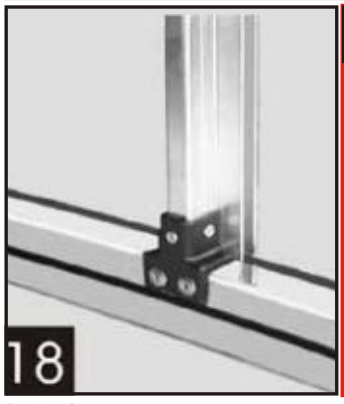
18

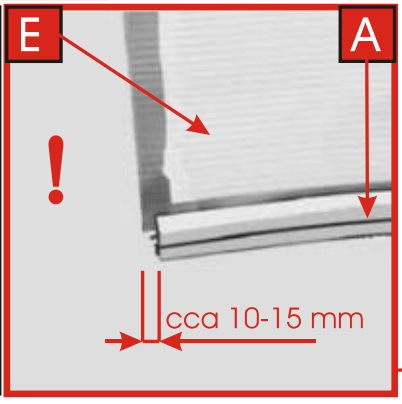
E
A
!
cca 10-15 mm

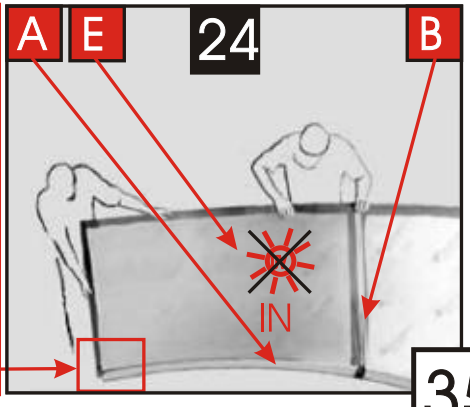
A
E
24
B
IN

Revize 1

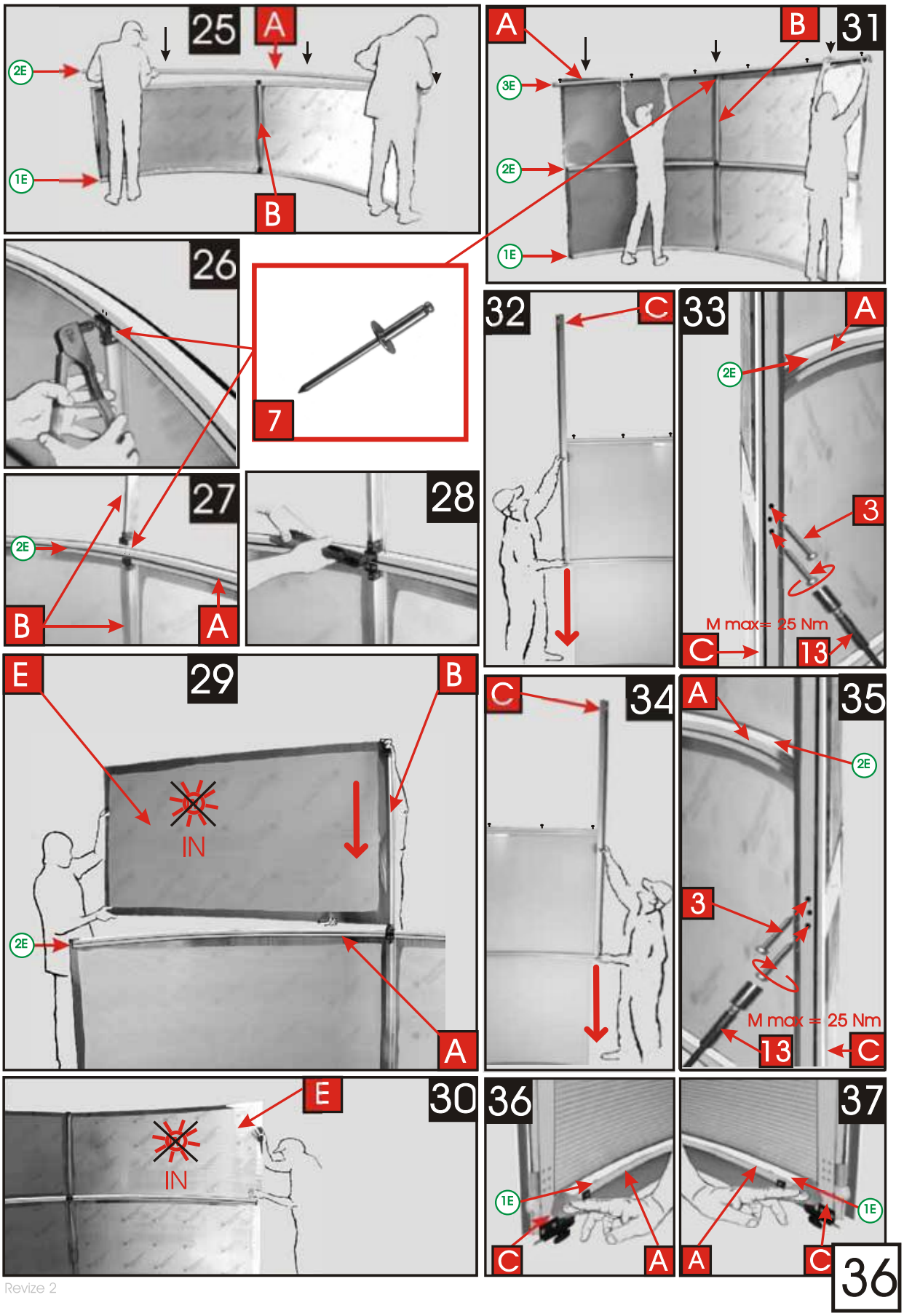
25
A
2E
1E
B
31
A
B
3E
2E
1E
26
7
32
C
33
A
2E
3
M max= 25 Nm
C
13
27
2E
B
A
28
29
E
B
IN
2E
A
34
C
35
A
2E
3
M max = 25 Nm
13
C
30
E
IN
36
1E
C
A
37
1E
A
C

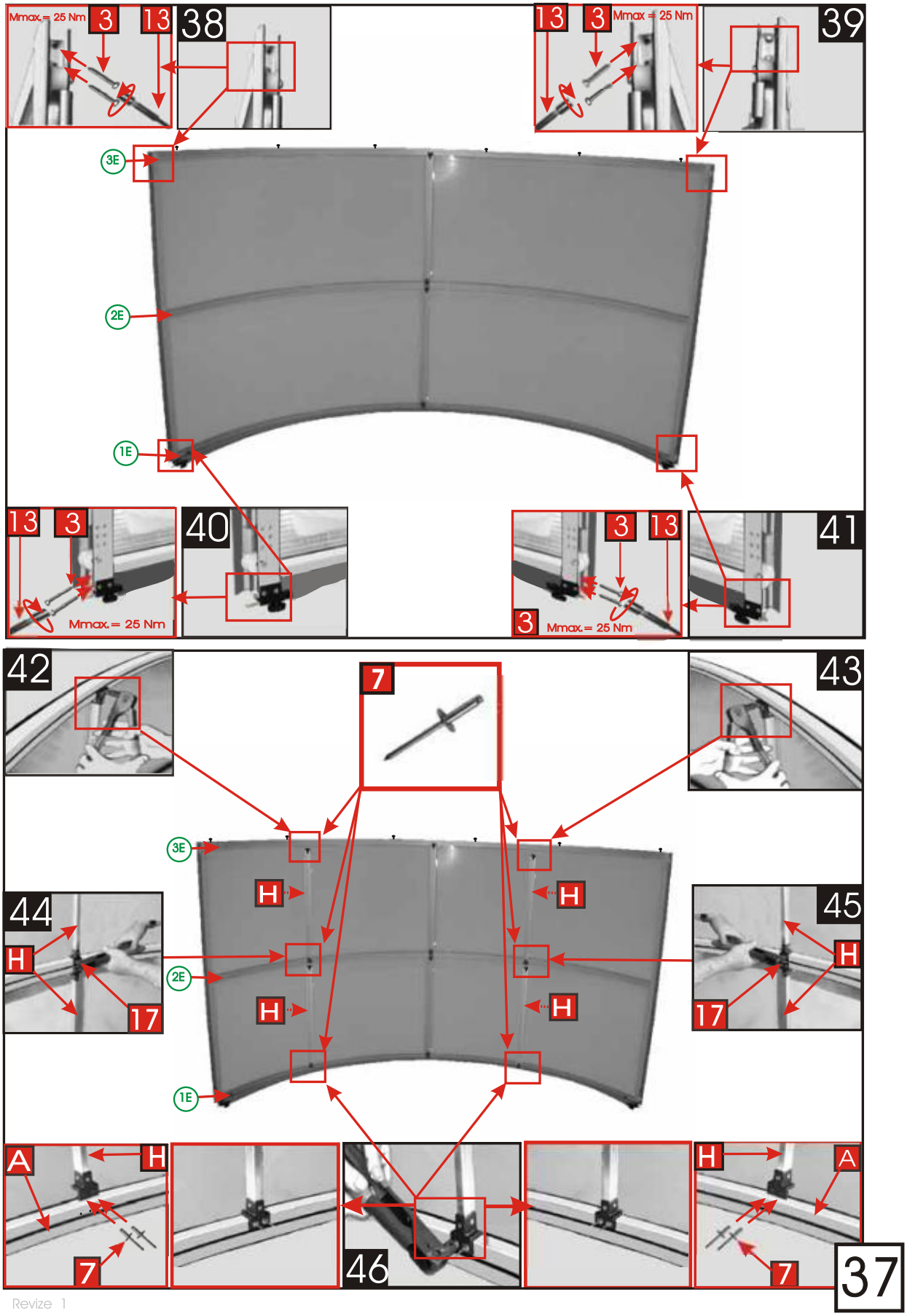

Mmax.= 25 Nm
3
13
38
13
3
Mmax = 25 Nm
39
3E
2E
1E
13
3
Mmax.= 25 Nm
40
3
13
3
Mmax.= 25 Nm
41
42
7
43
3E
H
H
44
H
17
2E
H
H
45
H
17
1E
A
H
7
46
H
A
7
37

Revize 1

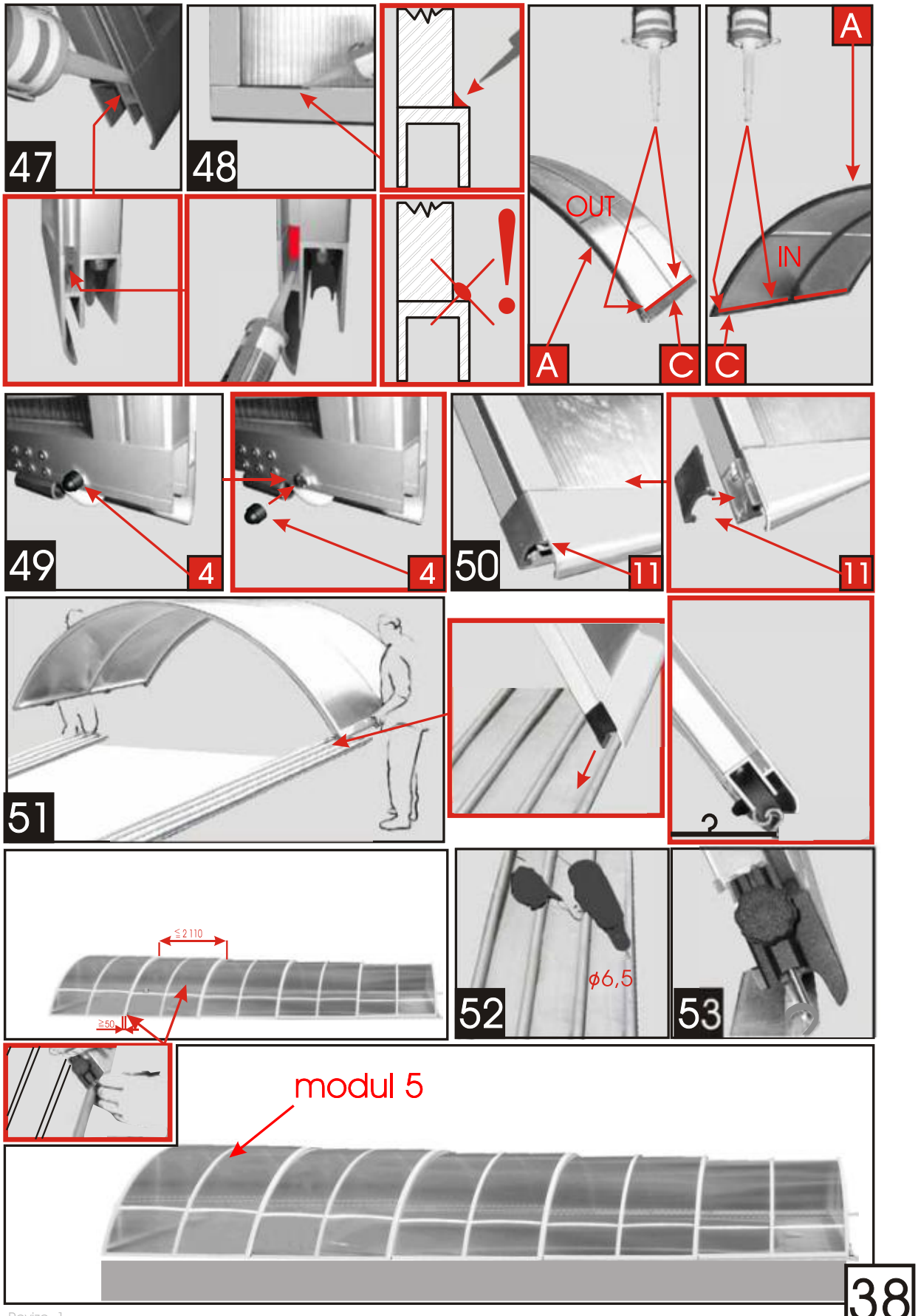
47
48
OUT
A
C
IN
A
C
49
4
4
50
11
11
51
2
≤ 2110
≥50
52
ϕ6,5
53
modul 5
38

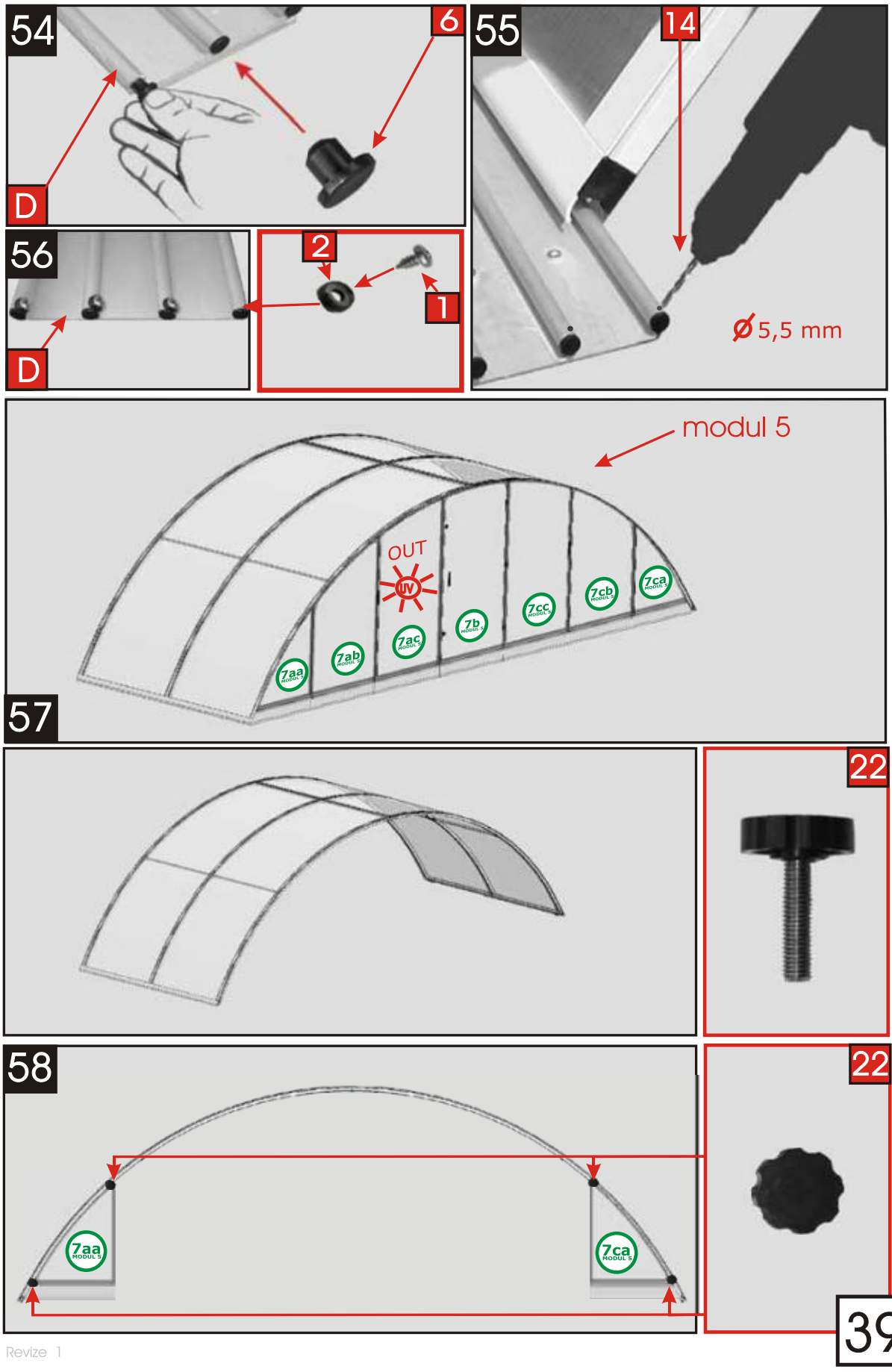
54
6
D
55
14
Ø 5,5 mm
56
D
2
1
modul 5
OUT
UV
7aa
7ab
7ac
7b
7cc
7cb
7ca
57
22
58
7aa
7ca
22
39

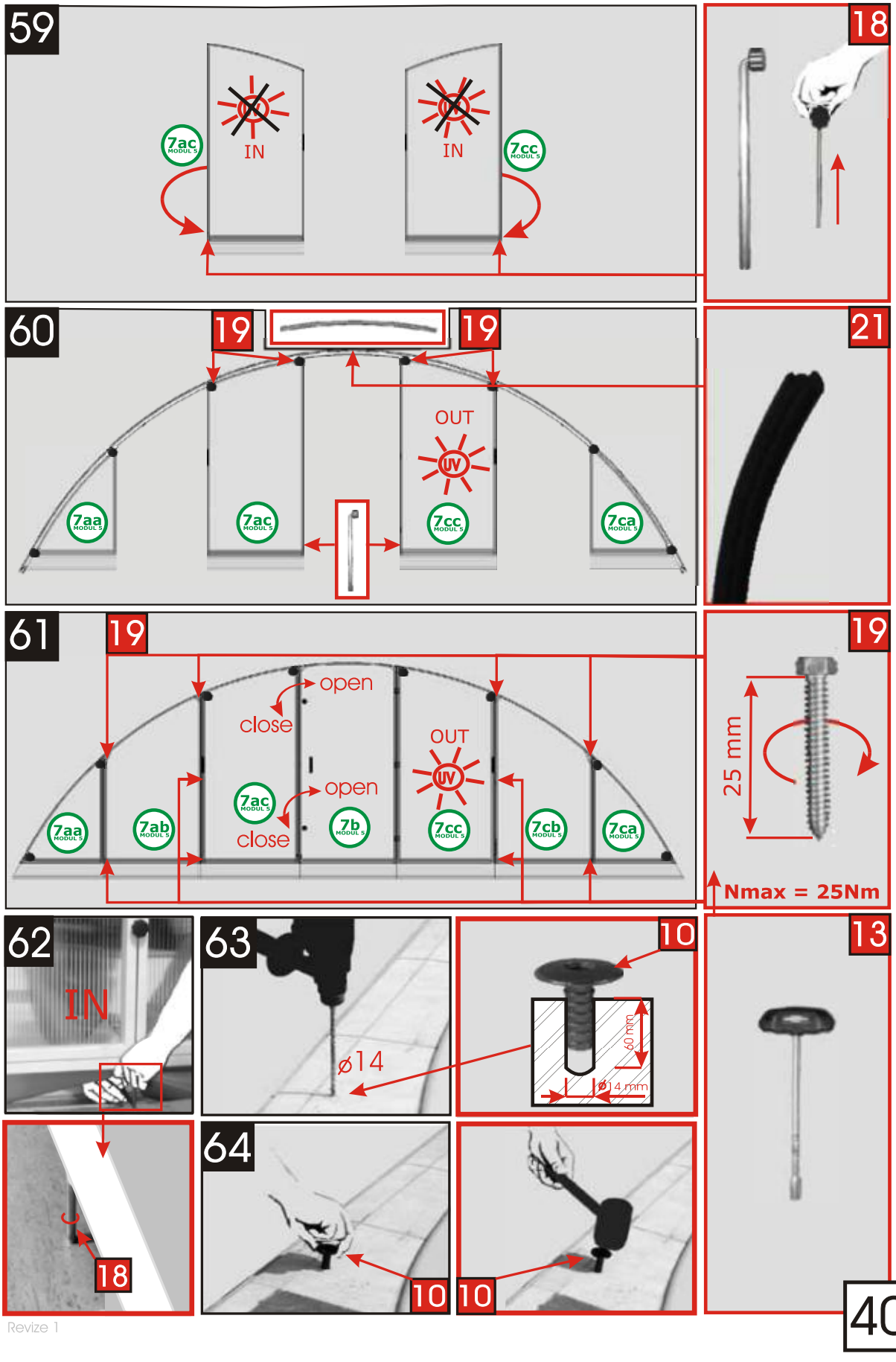
59
IN
IN
7ac
7cc
18
60
19
19
OUT
UV
7aa
7ac
7cc
7ca
21
61
19
open
close
OUT
UV
open
close
7aa
7ab
7ac
7b
7cc
7cb
7ca
19
25 mm
Nmax = 25Nm
62
IN
18
63
ø14
64
10
10
10
60 mm
ø14 mm
13
40

Revize 1

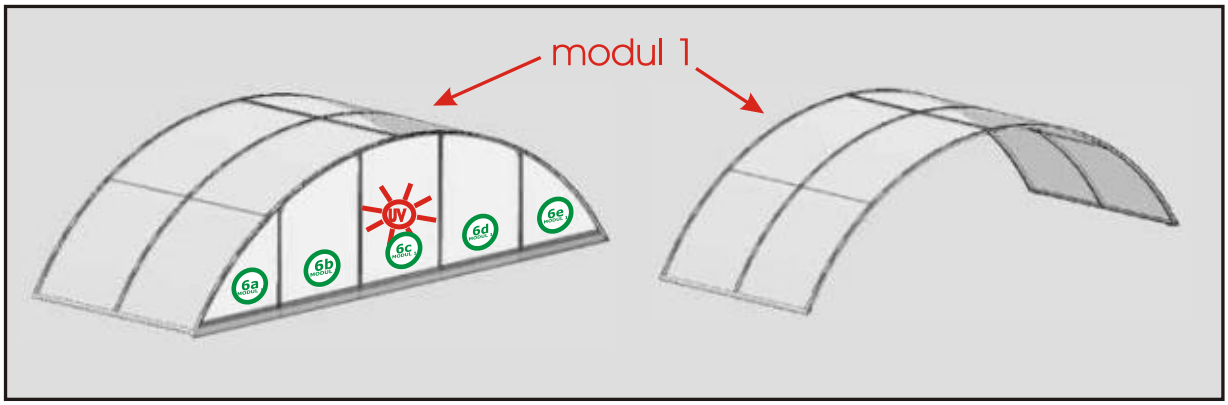
modul 1
6a
6b
6c
6d
6e

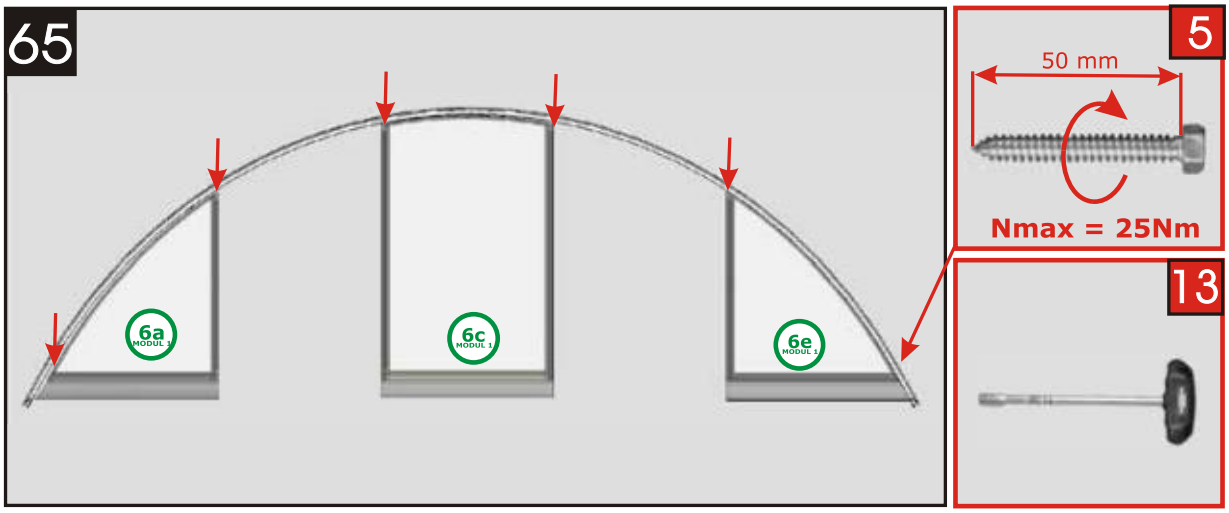
65
6a
6c
6e
5
50 mm
Nmax = 25Nm
13

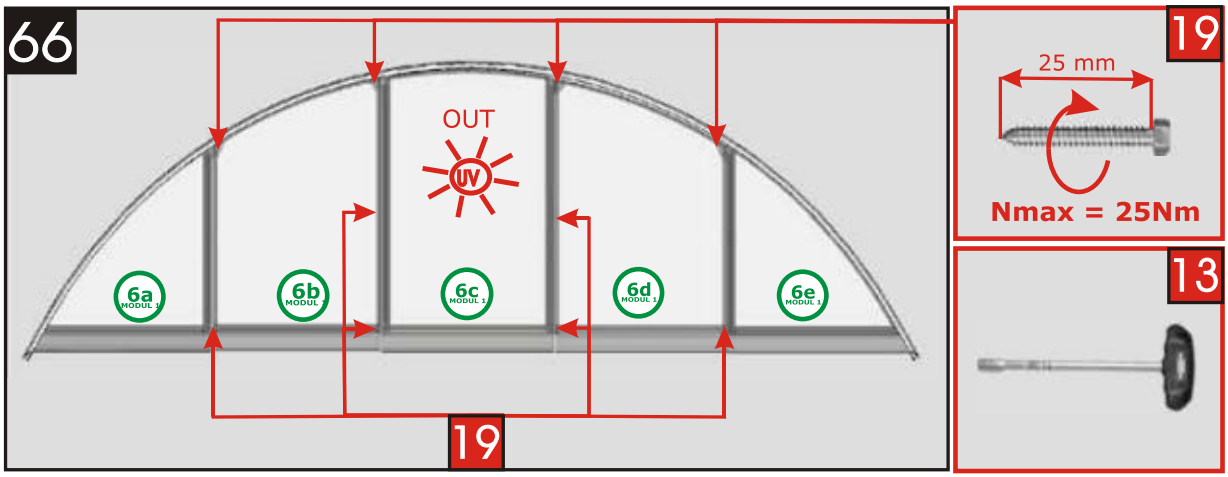
66
OUT
6a
6b
6c
6d
6e
19
19
25 mm
Nmax = 25Nm
13

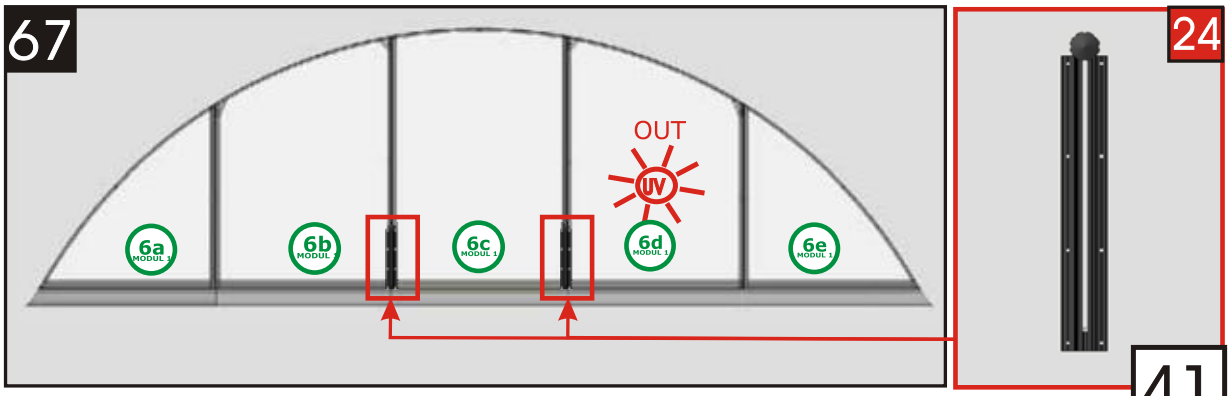
67
OUT
6a
6b
6c
6d
6e
24

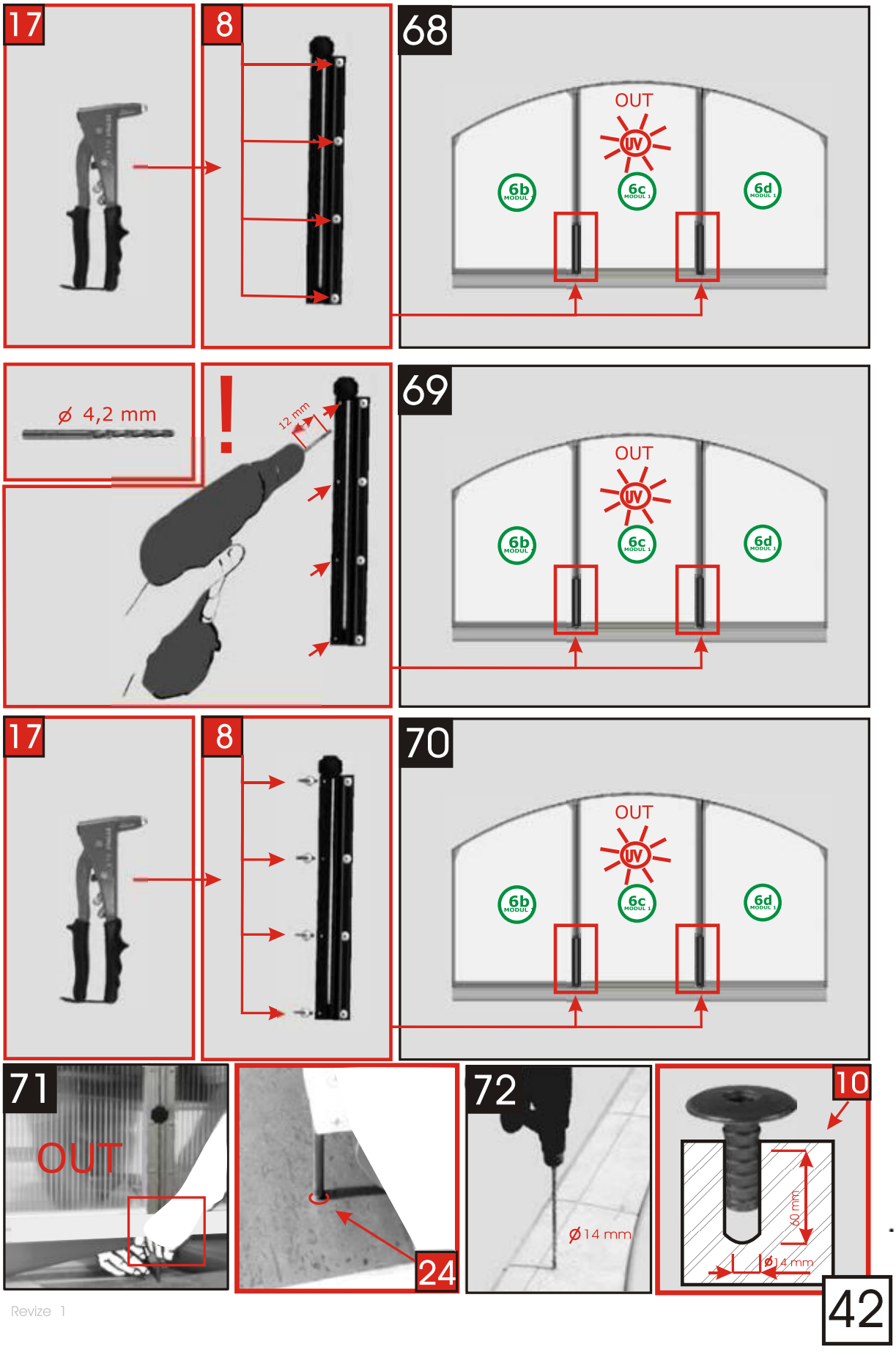
17
8
68
OUT
UV
6b
6c
6d
ø 4,2 mm
!
12 mm
69
OUT
UV
6b
6c
6d
17
8
70
OUT
UV
6b
6c
6d
71
OUT
24
72
ø14 mm
10
60 mm
ø14 mm
42